Operator's Manual

Trimble® Earthworks Excavator

Version 2.13.x
Revision A
June 2023

TRANSFORMING THE WAY THE WORLD WORKS

Trimble.

Contents

1 Controls and Guidance 9

1.1 Viewing Licenses 10
1.1.1 License types 10
1.1.2 Starter Edition licenses 11
1.1.3 Status icons 12
1.1.4 License information 12
1.2 Remote Switch 13
1.2.1 Depth and Slope mode functionality 14
1.2.2 Design mode functionality 14
1.3 On-screen Lightbars 15
1.3.1 The Lightbars screen 15
1.3.2 Understanding lightbar information 16
1.3.3 Useful text items 18
1.3.4 System buzzer 18
1.3.5 Troubleshooting 19
1.4 External Lightbars 19
1.4.1 The Lightbars screen 19
1.4.2 External lightbar behavior 20
1.4.3 Useful text items 22
1.4.4 System buzzer 22
1.4.5 Troubleshooting 22
1.5 Measure Mode 22
1.5.1 Position the machine 23
1.5.2 Using the Measure mode screen 23
1.6 Transferring Files 24
1.6.1 File categories 24
1.6.2 File structure for external storage devices 24
1.6.3 Syncing files with the Connected Community 25
1.6.4 Transferring files via an external storage device 26
1.6.5 Importing files to your machine 27
1.6.6 Exporting files from the machine 27
1.6.7 Using custom file import 28
1.6.8 Troubleshooting 28
1.6.9 System operation in Android 11 29
1.7 Using the AR camera 29
1.7.1 Supported operation 30
1.7.2 Setting the camera feed to display on a view pane 30
1.7.3 Calibrating the AR camera 30
1.7.4 AR camera calibration best practice 31
1.7.5 AR camera settings 32
1.7.6 Re-enabling the camera 32
1.7.7 Troubleshooting 33
1.8 Network 33

2 Using Depth and Slope Guidance 35
2.1 Using Depth and Slope Mode 36
2.1.1 The work screen 36
2.1.2 Overlays 37
2.1.3 System settings 38
2.1.4 The Back icon 39
2.1.5 For more information 39
2.2 Bench Heading 39
2.2.1 One point method 40
2.2.2 Two point method 40
2.2.3 When to re-bench your heading 41
2.2.4 Useful text items 41
2.2.5 Troubleshooting 41
2.3 Bench Elevation 42
2.3.1 Bench with a relative elevation 42
2.3.2 Bench with a reference elevation (known elevation) 44
2.3.3 When to re-bench your elevation 46
2.3.4 Placement of sections at the bench point 46
2.3.5 Useful text items 46
2.4 Slope and Section Memories 46
2.4.1 Mainfall memories 47
2.4.2 Cross slope memories 48
2.4.3 Section memories 48
2.5 Touch Point 53
2.5.1 Rotation limitations 54
2.5.2 Using Touch Point 54
2.5.3 Text items 55
2.6 Laser Referencing – Transfer Bench 55
2.6.1 Rotation limitations 56
2.6.2 Laser icons 56
2.6.3 Transfer bench information for level surfaces 56
2.6.4 Transfer bench information for sloping surfaces and sections 58
2.7 Offset From Laser 59
2.7.1 Rotation limitations 60
2.7.2 Laser icons 60
2.7.3 Using offset from laser for level surfaces 60
2.7.4 Using offset from laser for sloping surfaces and sections 62

3 Using Infield Guidance 64
3.1 Infield Designs 65
3.1.1 Level pad design 65
3.1.2 Slope design 65
3.1.3 Alignment & Section design 66

4 Using Design Guidance 76
4.1 Using Design Mode 77

4.1.1 Selecting Design mode 77
4.1.2 The work screen 77
4.1.3 Overlays 78
4.1.4 System settings 79
4.1.5 The Back icon 80
4.2 Using Elevation Offsets 80
4.2.1 Accessing the Elevation Offset screen 81
4.2.2 The Elevation Offset screen 81
4.2.3 Applying an elevation offset 82
4.2.4 Creating, editing or deleting memories 82
4.3 Horizontal Guidance 83
4.3.1 Access the Horizontal Guidance screen 83
4.3.2 The Horizontal Guidance screen 83
4.3.3 Horizontal position information 85
4.3.4 Creating, editing or deleting memories 85
4.4 Vertical Guidance 85
4.4.1 Access the Attachments screen 86
4.4.2 The Attachments screen 86
4.4.3 Overcut Protection 88
4.4.4 Edit the cutting edge length 89
4.4.5 Troubleshooting 89
4.5 Working with Points 89
4.5.1 Displaying points 89
4.5.2 Filtering points 89
4.5.3 Deleting a point 90
4.5.4 Recording a point 90
4.5.5 How to record a point 91
4.5.6 Point files 92
4.5.7 Navigating to a point 92
4.5.8 Troubleshooting 93
4.6 Measured Data 93
4.6.1 Creating a Measured Data 93
4.6.2 Deleting a Measured Data 93
4.6.3 Changing the Measured Data of a point 94
4.7 3D Line Guidance 94
4.7.1 Loading a 3D lines file 94
4.7.2 Accessing the 3D Line Guidance screen 95
4.7.3 Selecting a 3D line for guidance 96
4.7.4 Changing 3D line guidance 96
4.7.5 Lightbar guidance to a 3D line 96
4.7.6 Useful text items 96
4.8 Lane Guidance 96
4.8.1 Holding your attachment onto a surface or lane 97
4.8.2 Extending a lane sideways 97
4.8.3 The shortcut key 98
4.8.4 The Lane Guidance screen 98
4.8.5 Lane Guidance limits 99

4.8.6 Troubleshooting 100
4.9 Using GNSS 100
4.9.1 Troubleshooting 100

5 Using Single-3D Guidance 102
5.1 Using UTS for Guidance 103
5.1.1 The UTS Settings screen 103
5.1.2 The UTS Management screen 103
5.1.3 Troubleshooting UTS guidance 108
5.2 Using Single GNSS for Guidance 109
5.3 Best Practices When Using Single-3D Guidance 110
5.3.1 UTS 110
5.3.2 GNSS 110

6 Using Depth Autos 112
6.1 Depth Autos Setup 113
6.1.1 Depth Autos status indicators 113
6.1.2 Arm and Engage Depth Autos 114
6.1.3 Troubleshooting 116
6.2 Depth Autos Optimization 116
6.2.1 Presets 116
6.2.2 Optimize the Depth Autos performance 118
6.3 Best Practices When Using Depth Autos 122
6.3.1 Prepare the machine 123
6.3.2 Best practices for operating excavators 123

7 Using Tiltrotator Attachments 130
7.1 Using Tiltrotators 131
7.1.1 Plan view 131
7.1.2 Cross section view 132
7.1.3 Profile view 132
7.1.4 3D view 133
7.1.5 Useful text items 133
7.2 Tilt Autos Setup 133
7.2.1 Tilt Autos status indicators 134
7.2.2 Arm and Engage Tilt Autos 135
7.2.3 Troubleshooting 136
7.3 Tilt Autos Optimization 137
7.3.1 Presets 137
7.3.2 Optimize the Tilt Autos performance 139
7.4 Depth and Tilt Autos Setup 140
7.4.1 Depth and Tilt Autos status indicators 140
7.4.2 Arm and Engage Depth and Tilt Autos 141
7.4.3 Troubleshooting 143
7.5 Depth and Tilt Autos Optimization 144
7.5.1 Presets 144

7.5.2 Optimize the Depth and Tilt Autos performance 146
7.6 Best Practices When Using Tilt Autos 150
7.6.1 Prepare the machine 150
7.6.2 Best practices for operating excavators 151

8 Mapping 154
8.1 Mapping 155
8.1.1 Using mapping 155
8.1.2 Start mapping with an empty map 156
8.1.3 Start mapping with a pre-mapped surface 156
8.1.4 Downloading ground surface data from an online source 157
8.1.5 Deleting map data 157
8.1.6 Inspecting a map 158
8.1.7 The work screen 158
8.1.8 For more information 160
8.1.9 Troubleshooting 160

9 Avoidance Zones 161
9.1 Avoidance Zones 162
9.1.1 Avoidance zone icons 162
9.1.2 The work screen 163
9.1.3 Machine boundary 163
9.1.4 Troubleshooting 163

10 Viewing third party apps 164
10.1 Viewing the Payload Management app 165

A Remote Switch and Joystick Switches on other machine models 166
A.1 Joystick Switches and Remote Switch on Cat NGH mini/micro machines 167
A.1.1 Factory Standard Joystick Switch 167
A.1.2 Remote Switch 167
A.1.3 Depth and Slope mode functionality 167
A.1.4 Design mode functionality 168
A.2 Joystick Switches for Trimble Autos on Cat NGH series 07 machines 169

B Using Autos on other machine models 170
B.1 Depth Autos Setup, Tilt Autos Setup, or Both – Trimble Autos on Cat NGH series 07 machines 171
B.1.1 Autos status indicators 171
B.1.2 Enable and Engage Autos 172
B.1.3 Troubleshooting 175
B.2 Depth Autos Optimization, Tilt Autos Optimization, or Both – Trimble Autos on Cat NGH series 07 machines 175
B.2.1 Presets 176
B.2.2 Optimize the Depth and Tilt Autos performance 177
B.3 Depth Autos Setup, Tilt Autos Setup with a Non-Integrated Tiltrotator, or Both – Trimble Autos on Cat NGH series 07 machines 182

B.3.1 Autos status indicators 182
B.3.2 Enable and Engage Autos 183
B.3.3 Troubleshooting 186
B.4 Depth Autos Optimization, Tilt Autos Optimization with a Non-Integrated Tiltrotator, or Both – Trimble Autos on Cat NGH series 07 machines 187
B.4.1 Presets 187
B.4.2 Optimize the Depth and Tilt Autos performance 189
B.5 Best Practices When Using Depth Autos – Trimble Autos on Cat NGH series 07 machines 193
B.5.1 Prepare the machine 193
B.5.2 Best practices for operating excavators 194
B.6 Best Practices When Using Tilt Autos – Trimble Autos on Cat NGH series 07 machines 199
B.6.1 Prepare the machine 200
B.6.2 Best practices for operating excavators 200
B.7 Depth Autos Setup on Cat NGH mini/micro machines 201
B.7.1 Depth Autos status indicators 202
B.7.2 Arm and Engage Depth Autos 202
B.7.3 Troubleshooting 204
B.8 Depth Autos Optimization on Cat NGH mini/micro machines 204
B.8.1 Presets 204
B.8.2 Optimize the Depth Autos performance 206
B.9 Tilt Autos Setup on Cat NGH mini/micro machines 210
B.9.1 Tilt Autos status indicators 211
B.9.2 Enable and Engage Tilt Autos 212
B.9.3 Troubleshooting 214
B.10 Tilt Autos Optimization on Cat NGH mini/micro machines 214
B.10.1 Presets 214
B.10.2 Optimize the Tilt Autos performance 216
B.11 Depth and Tilt Autos Setup on Cat NGH mini/micro machines 217
B.11.1 Depth and Tilt Autos status indicators 218
B.11.2 Enable and Engage Depth and Tilt Autos 219
B.11.3 Troubleshooting 221
B.12 Depth and Tilt Autos Optimization on Cat NGH mini/micro machines 222
B.12.1 Presets 222
B.12.2 Optimize the Depth and Tilt Autos performance 224
B.13 Best Practices When Using Depth Autos on Cat NGH mini/micro machines 228
B.13.1 Prepare the machine 229
B.13.2 Best practices for operating excavators 229
B.14 Best Practices When Using Tilt Autos on Cat NGH mini/micro machines 235
B.14.1 Prepare the machine 236
B.14.2 Best practices for operating excavators 236

C Using Tiltrotators on other machine models 239

C.1 Using Tiltrotators on Cat NGH mini/micro machines 240
C.1.1 Plan view 240
C.1.2 Cross section view 241
C.1.3 Profile view 241
C.1.4 3D view 242

C.1.5 Useful text items 242

D Legal and Regulatory 243

D.1 END USER LICENSE AGREEMENT 244
D.2 Copyright Information 250
D.3 Release Notice 250
D.4 Compliance notices 250
D.4.1 US FCC regulations 250
D.4.2 Canadian license-exempt RSS standards 251
D.4.3 European Union CE compliance 252
D.4.4 European Union recycling compliance 252
D.4.5 Australian and New Zealand AS/NZS 55022 compliance 253
D.4.6 Japan Radio Type Approval 253
D.4.7 RoHS Statement 253
D.4.8 Taiwan 253
D.5 Safety information 253
D.5.1 Laser Safety 254
D.5.2 Magnet Safety 255
D.5.3 Crushing prevention and cutting prevention 255
D.5.4 Operation 255
D.5.5 Exposure to radio frequency (RF) signals 257
D.5.6 Telecommunications & Internet Association (TIA) information 258
D.5.7 Warnings 258

Notices 262

1

Controls and Guidance

In this chapter:

- Viewing Licenses
- Remote Switch
- On-screen Lightbars
- External Lightbars
- Measure Mode
- Transferring Files
- Using the AR camera
- Network

You need to set up and control the guidance system and understand the guidance information the system provides. This chapter describes, in general terms, how these components are used.

1.1 Viewing Licenses

To view the Licenses screen:

- From the Dashboard, tap the Licenses tile.
- From the System Settings menu, select Licenses.

Your technician can install licenses manually on your system, or synchronize them with the cloud.

You can tap Refresh to check that your licenses are up to date.

If the installed license is from the cloud, a cloud icon ☁ displays.

1.1.1 License types

Licenses enable different levels of functionality within the system. The following types of licenses are available:

License Type	Description
Core license	Allows the system to operate and provide basic machine guidance.
Software maintenance license	Bundled together with the core license to allow users to install upgrades during the period of validity.
Module license	Optional licenses that build on the core license to provide additional functionality. For example, Infield Designs, 3D Design Guidance.
Advanced module license	Optional licenses that build on the core license to provide advanced functionality. For example, Earthmoving, workflow optimization.
GNSS receiver license	Required together with some module licenses if GNSS receivers are used for the guidance solution. The license name depicts the type of corrections received. For example, Left GNSS Receiver with Full RTK Precision.
GNSS constellation license	Optional GNSS receiver licenses you can enable to receive signals from the following GNSS constellations: • Global Positioning Satellite System (GLONASS) satellites, operated by the Russian Department of Defense. • Galileo Satellite System, operated by the European Space Agency. • BeiDou Navigation Satellite System (BDS) satellites, operated by the Chinese National Space

License Type	Description
	Administration. *Note – By default, all GNSS receivers can receive signals from the Global Positioning System (GPS) satellites, operated by the United States Department of Defense and Quasi-Zenith Satellite System (QZSS) satellites, operated by the Japanese Satellite Positioning.*

1.1.2 Starter Edition licenses

Starter Edition (SE) licenses provide a reduced excavator feature set with limited 3D functionality. Both an SE module license and the core excavator license is required.

SE licenses can be identified in the Licenses screen as: Module License – Excavator, 3D Guidance, SE.

The SE license supports:

- 3D guidance to office and infield designs
- Horizontal guidance to lines and offsets
- Infield design creation including levels, slopes, and alignments and profiles.
- Navigate to point on infield designs
- Perpendicular and vertical lifts and offsets
- Point recording
- Tag file support
- UTS guidance
- Trimble LOADRITE Payload Management app support (if you have the Loadrite license and hardware)

The SE license does not support:

- On–Machine augmented reality
- Mapping
- Navigate to point on office designs
- Lane guidance
- Multiple surfaces
- Avoidance zones

By default, the SE license does not support the following, but you can optionally apply them to further enhance the SE license functionality:

- Excavator Design Automatics
- Module License – Excavator, Advanced Positioning and Controls
- Module License – Earthmoving, Workflow Optimization

For full functionality, your technician can upgrade your SE license. An upgraded SE license can be identified in the Licenses screen as: Module Bundle – Infield Designs, 3D Guidance, Upgrade from HEX SE.

When the upgrade from SE license is applied to a system with an SE license the system will have the same functionality as one with the Infield Designs, 3D Guidance license. For example, Module Bundle – Infield Designs, 3D Guidance.

1.1.3 Status icons

The system provides a status icon beside each license, as shown below:

Icon	Type	Description
	Good	For the current configuration, the license is installed correctly.
	Attention	• For the current configuration, a license that is expected, and which adds functionality, is missing or expired. • The installed license is about to expire.
	Warning	For the current configuration, a license that is required is missing or expired.
	None	A device is connected, but has no license installed.

1.1.4 License information

Tap on an installed license for more information. An information panel displays the following details:

License Attributes	Description
Functionality	Description of the functionality that the license provides.
Status	Whether the license is installed or not installed.
Type	• Perpetual – an open-ended license. • Subscription – license that expires after a fixed term, if not renewed.
Location	• Installed on the system ECM. • Installed on the display. • Installed on the left/right GNSS receiver.
Expiration (if subscription)	The date the license will expire. *Note – Your technician can manage licenses via the Web Interface.*

1.2 Remote Switch

Note – For other machines models, see A Remote Switch and Joystick Switches on other machine models.

Note – You cannot configure the remote switch.

The remote switch lets you use common features while keeping your hands close to the machine controls. The remote switch only functions when you are in the work screen. The functionality of the remote switch depends on the mode you are in.

For Depth and Slope mode, the remote switch lets you:

- Select the attachment focus
  Each button press will cycle the attachment focus from Left to Right
- Increase or decrease the elevation offset
- Bench elevation
- Confirm and engage Depth Autos (depth auto switch)

For Design mode, the remote switch lets you:

- Select the attachment focus
  Each button press will cycle the attachment focus from Left to Right
- Increase or decrease the elevation offset
- Record point
- Confirm and engage Autos (auto switch)
  Note – For tiltrotators, this only controls Depth Autos. Use the tilt auto switch as per your tiltrotator manufacturer instructions. For tilting buckets and tilting hitches this controls both Depth and Tilt Autos.

1.2.1 Depth and Slope mode functionality

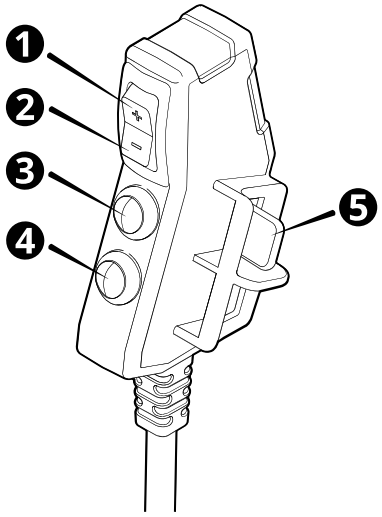

1	Increment elevation offset switch	2	Decrement elevation offset switch	3	Bench elevation switch
4	Attachment focus switch	5	Confirm and engage Depth Autos (depth auto switch)		

1.2.2 Design mode functionality

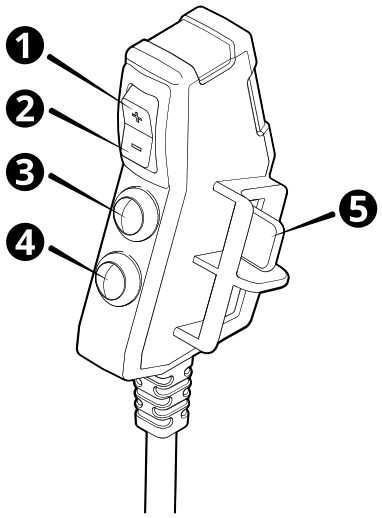

1	Increment elevation	2	Decrement elevation	3	Record point switch

	offset switch		offset switch
❹	Attachment focus switch	❺	Confirm and engage Autos (auto switch)

1.3 On-screen Lightbars

Lightbars provide you with guidance information. They enable you to view the guidance information, attachment, and the surface you are working all at the same time.

TIP – Lightbars provide guidance to designs or alignments, they do not provide guidance to a point.

1.3.1 The Lightbars screen

Use the Lightbars screen to select the guidance that you want. You can access the Lightbars screen from the System Settings menu .

The screen shows the current lightbar configuration.

It also contains a drop-down list of Modes that you can work in. The options include:

- Standard Excavator
- Slope Form Bucket
- Left Right Cut/Fill

Next are the options for the left, center and right lightbars. Use the toggle to turn the lightbars on and off.

The left lightbar provides attachment tip cut/fill guidance. You can choose the type of cut/fill guidance from the drop-down list:

- Attachment Focus: The lightbar provides guidance to the attachment focus.
- Dynamic: The lightbar provides guidance to the attachment tip that you need to either lower the least or raise the most to place it onto grade:
  - The attachment tip with the smallest cut value, when both attachment tips are above the temporary working surface.
  - The attachment tip with the largest fill value, when both attachment tips are below the temporary working surface.
  - The fill attachment tip, when one attachment tip is below and one attachment tip is above the temporary working surface.

The guidance that the center and right lightbars provide depends on the type of mode that you choose.

1.3.2 Understanding lightbar information

The on-screen lightbars appear along the left, top, and right edges of the display, depending on your system configuration.

The following table describes the different items in the left/right on-screen lightbars:

Item		Function
Live location arrow	▷	The arrow moves along the lightbar, tracking changes in the position of the cutting edge. It shows whether the current position is cut, fill or on grade in relation to the design or target surface.
Cut	■	The cut zone is red, and is above the on grade tolerance zone. The cut zone is active when the current position of the cutting edge is above the design or target surface.
On grade tolerance	▼ or ▲	The on grade tolerance zone is always bright green. *Note – To change the on-grade tolerance zone, go to System Settings > Grade Tolerance.*
Fill	■	The fill zone is blue, and is below the on grade tolerance zone. The fill zone is active when the current position of the cutting edge is below the design or target surface.

The lightbars behave differently depending on the mode you are working in.

The following tables describe what the lightbars display for each mode.

Standard bucket – Depth and Slope mode

Left lightbar
Cut/Fill guidance to the attachment tip: • Green – On grade

Right lightbar
The position of the laser plane is above/below the center of the laser catcher window: • Green – The laser plane is in the center of the laser catcher window. • Amber – The laser plane is not in the center of the laser catcher window.

Right lightbar
Note – This lightbar only appears if your system includes a laser catcher and GNSS receivers are not enabled.

Standard bucket – Design mode

Left lightbar
Cut/Fill guidance to the attachment tip: • Red – Cut • Green – On grade • Blue – Fill

Center lightbar
Left/right guidance to a selected line. • Green – The attachment focus point is on the line. • Amber – The focus point is not on the line. Also, the amber color indicates which way you need to slew the machine to get to the line. *Note – This lightbar is active when the machine is within 45° of parallel to the selected line.*

Right lightbar
In/out (retract/extend) guidance to a selected line. • Red – Move the attachment in • Green – On line • Blue – Move the attachment out *Note – This lightbar is active when the machine is within 45° of square to the selected line.*

Slope form bucket – Depth and Slope mode

Left lightbar
Cut/fill guidance to the attachment tip: • Red – Cut • Green – On grade • Blue – Fill

Right lightbar
Cut/fill guidance to the back of the attachment:

Right lightbar
• Red – Cut • Green – On grade • Blue – Fill

Slope form bucket – Design mode

Left lightbar
Cut/Fill guidance to the attachment tip: • Green – On grade

Center lightbar
Attachment curl guidance to the bottom of the attachment: • Amber (left of center) – Curl the attachment out (dump) away from the cab. • Green – The bottom of the attachment is parallel to the design slope. • Amber (right of center) – Curl the attachment in towards the cab.

Right lightbar
Cut/fill guidance to the back of the attachment: • Green – On grade

1.3.3 Useful text items

- Cut/Fill Left
- Cut/Fill Center
- Cut/Fill Right

Note – If the text item value is Cut then the icon in the text item shows a red arrow; if it is Fill it shows a blue arrow; and if it is within the on grade tolerance it shows a green arrow.

1.3.4 System buzzer

When the lightbars are in Cut/Fill Left and Cut/Fill Right, the system buzzer Cut/Fill is determined on the attachment tip that is farthest from design. Both tips need to be within grade tolerance for the buzzer to sound.

When using Slope Form Bucket mode, the system buzzer is determined on the attachment tip that is farthest from design. Both the front and back of the bucket must be within grade tolerance for the buzzer to sound.

1.3.5 Troubleshooting

The lightbars are disabled if there is no guidance available, for example if the elevation is not benched. When the lightbars are disabled, they appear as follows:

- The location arrow does not appear
- The lightbars are grayed-out
- The Cut/Fill or Offline text items do not show any values

1.4 External Lightbars

Lightbars provide you with guidance information. Properly installed external lightbars enable you to view guidance information, the attachment, and the surface you are working, at the same time.

TIP – Lightbars provide guidance to designs or alignments, they do not provide guidance to a point.

1.4.1 The Lightbars screen

Use the Lightbars screen to select the guidance that you want. You can access the Lightbars screen from the System Settings menu .

The screen shows the current lightbar configuration.

It also contains a drop-down list of Modes that you can work in. The options include:

- Standard Excavator
- Slope Form Bucket
- Left Right Cut/Fill

Next are the options for the left, center and right lightbars. Use the toggle to turn the lightbars on and off.

The left lightbar provides attachment tip cut/fill guidance. You can choose the type of cut/fill guidance from the drop-down list:

- Attachment Focus: The lightbar provides guidance to the attachment focus.
- Dynamic: The lightbar provides guidance to the attachment tip that you need to either lower the least or raise the most to place it onto grade:
  - The attachment tip with the smallest cut value, when both attachment tips are above the temporary working surface.
  - The attachment tip with the largest fill value, when both attachment tips are below the temporary working surface.
  - The fill attachment tip, when one attachment tip is below and one attachment tip is above the temporary working surface.

The center lightbar provides offline left/right guidance.

The right lightbar provides offline in/out guidance.

To adjust the brightness of the lightbars, use the slider at the bottom of the screen.

1.4.2 External lightbar behavior

You can install up to three lightbars on an excavator. The lightbars behave differently depending on the options you choose in the Lightbar screen, and the mode you are working in.

The following tables describe what the lightbars display for each mode and the various configurations.

Depth and Slope mode - Standard excavator

Left lightbar
Cut/fill guidance to the attachment tip: Green – On grade

Right lightbar
The position of the laser plane is above/below the center of the laser catcher window: • Green – The laser plane is in the center of the laser catcher window. • Amber – The laser plane is not in the center of the laser catcher window. *Note – Use this lightbar if your system includes a laser catcher and GNSS receivers are not enabled.*

Depth and Slope mode - Slope form bucket

Left lightbar
Cut/fill guidance to the attachment tip: Green – On grade Amber – Not on grade

Right lightbar
Cut/fill guidance to the back of the attachment: Green – On grade Amber – Not on grade

Design mode - Standard excavator

Left lightbar
Attachment tip cut/fill guidance: Green – On grade Amber – Not on grade

Center lightbar
Left/right guidance to a selected line. This lightbar is active when the machine is within 45° of *parallel* to the selected line. • Green – the attachment focus point is on the line • Amber – the focus point is not on the line. Also, the amber color indicates which way you need to slew the machine to get to the line.

Right lightbar
In/out (retract/extend) guidance to a selected line. This lightbar is active when the machine is within 45° of *square* to the selected line. • Green – the attachment is on line • Amber– move the attachment in or out

Design mode - Slope form bucket

Left lightbar
Attachment tip cut/fill guidance: • Green – On grade • Amber – Not on grade

Center lightbar
Attachment curl guidance to the bottom of the attachment: • Amber (left of center) – curl the attachment out (dump) away from the cab • Green – the bottom of the attachment is parallel to the design slope • Amber (right of center) – curl the attachment in towards the cab

Right lightbar
Cut/fill guidance to the back of the attachment.

Right lightbar
• Green – On grade • Amber – Not on grade

1.4.3 Useful text items

- Cut/Fill Left
- Cut/Fill Center
- Cut/Fill Right

Note – If the text item value is Cut then the icon in the text item shows a red arrow; if it is Fill it shows a blue arrow; and if it is within the on grade tolerance it shows a green arrow.

1.4.4 System buzzer

When the lightbars are in Cut/Fill Left and Cut/Fill Right, the system buzzer Cut/Fill is determined on the attachment tip that is farthest from design. Both tips need to be within grade tolerance for the buzzer to sound.

When using Slope Form Bucket mode, the system buzzer is determined on the attachment tip that is farthest from design. Both the front and back of the bucket must be within grade tolerance for the buzzer to sound.

1.4.5 Troubleshooting

The lightbars are disabled if there is no guidance available, for example if the elevation is not benched. When the lightbars are disabled, they appear as follows:

- The location arrow does not appear
- The lightbars are grayed-out
- The Cut/Fill or Offline text items do not show any values

If you notice either of the following problems, ask your technician to check the configuration of the external lightbars in the Web Interface:

- A lightbar pattern is inverted.
- The lightbars are lit in the wrong order, for example the right lightbar is showing the left side Cut/Fills.

1.5 Measure Mode

Measure mode enables you to measure the distance and slope between two points. After you place the attachment cutting edge over an initial point, the system then displays any deviation from this point in terms of horizontal reach, elevation and slope.

You can save the slope and depth values into the mainfall and offset memories.

The type of system you have and the mode you are in determines whether you can rotate the cab or move the machine tracks.

Mode	Can rotate the cab	Can move the machine tracks
Depth and Slope mode	No	No
Depth and slope mode, plus heading sensor	Yes	No
Design mode, plus two GNSS receivers	Yes	Yes

1.5.1 Position the machine

Select the origin point:

- Within reach of both your origin point and the end point that you want to measure to.
- Unless the system uses a heading sensor or GNSS receivers, do not rotate the cab or re-position the machine tracks to reach the end point.

  Keep the orientation of the front linkage consistent when you take the measurement.

1.5.2 Using the Measure mode screen

Once you have positioned your machine, access the Measure Mode screen:

1. Tap the Work Settings icon in the shortcut bar. The Work Settings menu opens.
2. Select Measure mode.
3. Check that the correct position of guidance focus has been selected for the attachment.
4. Place the attachment focus on the start point of the measurement.
5. Tap Set Origin.

   If required, you can save the slope and depth values into the mainfall and offset memories.
6. Move the attachment focus to the end point of the measurement.

   Once the attachment has moved enough to give a measurable change in position, the screen updates to show the depth and slope measurement between the two points.

1.6 Transferring Files

The File Transfer screen is available in the System Settings menu . It lets you do the following:

- Import files to the machine from the display's hard drive, or, an external storage device.
- Export files from the machine to the display's hard drive, or, an external storage device.
- Custom select, if enabled, the files you want to import from the display's hard drive, or, an external storage device.

If you have an Operator Plus account you can perform further file management functions via the Advanced button on either the File Transfer screen or the Project screen.

Note – To transfer files via a USB flash drive, you must have a TD520 display and a FAT32 format USB flash drive. Any USB flash drive larger than 32GB may require a third-party application to format it as FAT32.

1.6.1 File categories

Each time you import or export files to or from the machine, you need to choose the files that you want to transfer. To do this, select the checkbox next to the category.

- Earthworks Data: You can transfer all data files or none.
- Projects: You can transfer the project files of your choice. Expand the Projects file to show each project with its own checkbox.

TIP – Within the expanded project, select Infield Data to only export the infield designs for the project.

- Production Data: You can transfer data files for use in VisionLink, WorksOS or both.

1.6.2 File structure for external storage devices

When using Import Files TO Machine files on external storage devices, the files must be saved within the folder structure below:

Path	Description of Contents
<Root>:\ProjectLibrary	Top-level folder containing the data sub-folders.
<Root>:\ProjectLibrary\EarthworksData	Top-level folder for data files.
<Root>:\ProjectLibrary\GeoData	Geographical data which is used in one or

Path	Description of Contents
	more projects.
<Root>:\ProjectLibrary\Projects	Project folders containing project-specific data such as designs.

Note – Place files only within the sub-folders of the top-level folders.

Note – Custom File Import TO Machine does not require the above folder structure on the external storage device.

1.6.3 Syncing files with the Connected Community

Transfer files between the machine and Connected Community to ensure the machine has the latest files and that the office has access to the data recorded on the machine.

If your machine is configured for syncing, an option to Sync Files with Connected Community Sync appears in the File Transfer screen. All relevant files within the current project are synchronized.

Automatic file sync

When automatic file sync is enabled in the Web Interface, files will automatically synchronize to Connected Community every 15 minutes, whenever the machine is powered and has an active internet connection. You are not told when the sync is in progress, or if it was successful or not.

Manual file sync

You can initiate a manual file sync to Connected Community at the end of the day; for example, if automatic file sync is not enabled or to ensure that all of the files from the last 15 minutes have been synced and are available in the office.

1. Access the File Transfer screen.
2. Confirm Sync Files with Connected Community is selected in Transfer Type.
3. Tap Sync. The File Transfer screen grays-out and a progress meter displays. Once the system connects with Connected Community, the progress meter indicates the file categories that are transferring.

   To stop the sync, tap Cancel. The file transfer stops and any partial transfers (categories that did not completely transfer) are deleted. Any categories that did completely transfer are kept.

When the file transfer is complete a success notification appears.

If you initiate a sync with Connected Community and an automatic file sync is already in progress you are asked if you would like to continue. If you choose:

- Yes, the sync that is currently in progress stops and the sync that you initiated starts.
- No, the automatic sync that is currently in progress continues and the Transfer Files screen reappears.

1.6.4 Transferring files via an external storage device

Note – The TD520 display only supports USB flash drives that are FAT32 format. Any USB flash drive larger than 32GB may require a third-party application to format it as FAT32.

Import Files TO Machine

Before you can use the Import Files TO Machine option, you must create a folder structure on your external storage device that matches the machine's file organization structure. This enables the machine to place your files in the correct location during the transfer process.

TIP – Export the machine's existing folder structure to your external storage device to quickly create the necessary folder structure for transfers. For more information, see 1.6.6 Exporting files from the machine.

Preparing your external storage device for file transfer

1. Format your USB flash drive in the FAT32 format, if using a USB flash drive.
2. Create the top-level folder, or folders, required for the data to be transferred on your external storage device. For more information, see 1.6.2 File structure for external storage devices.
3. Copy your files to the appropriate folder on the external storage device (for example, copy your project files to *ProjectLibrary* > *Projects*).

Connecting your external storage device for file transfer

1. Log in to the display.
2. Connect your external storage device to the display. The File Transfer screen appears.
3. Import or export the files of your choice.

ATTENTION - When transferring files to or from an external storage device, an Android OS screen appears. The first time the screen appears, it is blank, apart from three vertical dots ⋮ in the upper right-hand corner. Select the dots and then select Show SD Card. The Android screen changes. From the left-hand panel, select your external storage device and then select SELECT in the lower right-hand corner. (Do not select any files or folders from the right-hand panel.)

1.6.5 Importing files to your machine

1. Access the File Transfer screen.
2. Select Import Files TO Machine from the *Transfer Type* field.
3. Select the source type from the *From* field.
4. Tap Next. The Import Files screen appears.
5. Select the files that you want to import.
6. Tap Import to start the file transfer. Tap Cancel to exit the screen without applying any changes.

The import process

After you tap Import a progress meter appears and the File Transfer screen is grayed-out.

First the system checks the available storage on the machine. Once sufficient space is confirmed the progress meter indicates the files that are transferring.

If you tap Cancel the file transfer stops.

When the file transfer is complete a success notification appears.

Files are overwritten with newest versions

When transferring files from an external storage device to the machine, all files on machine that have the same name as the files on the external storage device will be overwritten with the external storage device files. This includes the user preferences file userdata.pref.xml, which saves the settings; for example, the text items that are configured.

To keep the user preferences saved on a machine, either:

- Perform a File Transfer of the EarthworksData to the USB flash drive first, then perform a File Transfer from the USB flash drive to the machine

OR

- Untick the EarthworksData box when transferring files from the USB flash drive to the machine

Note – The userdata.pref.xml file is stored at ProjectLibrary > EarthworksData > [Machine Name Folder]

1.6.6 Exporting files from the machine

1. Access the File Transfer screen.
2. In the *Transfer Type* field, select Export Files FROM Machine.
3. In the *To* field, select the destination.
4. Tap Next. The Export Files screen appears.
5. The available files to export are listed. Select the files that you want to export.

6. To initiate the file transfer, tap Export; to exit the screen without applying any changes, tap Cancel.

The export process

After you tap Export a progress meter appears and the File Transfer screen is grayed-out.

The system checks the available storage on the destination device. Once sufficient space is confirmed the progress meter indicates the files that are transferring.

If you tap Cancel the file transfer stops.

When the file transfer is complete a success notification appears.

Note – If a full backup of all files on the machine is required this can only be performed via the Web Interface "Back up all" option on the File Management page.

1.6.7 Using custom file import

1. Access the File Transfer screen.
2. Select Custom File Import TO Machine from the *Transfer Type* field.
3. Select the project to import the files into, or add a new project, from the *Project* field.
4. Tap Next. If adding a new project, enter a project name in Project Name and tap Save.
5. Find the file or files you want to import on the file list screen.
    a. Tap a single file to select it.
    b. Tap and hold to select multiple files and tap Open in the upper right corner.
6. Confirm the files you want to import on the Import Files screen and tap Import.

1.6.8 Troubleshooting

The following notices may appear when you are transferring files:

Unsuccessful Connection

This message appears if the system cannot connect to the Connected Community. Tap OK to return to the File Transfer screen. Check the Connected Community settings and the Internet Connection Status in the Web Interface.

Insufficient Storage

This message appears if sufficient space is not available in the destination device. Tap OK to return to the File Transfer screen. From here you can choose a different destination device (if available) and then retry, or tap Cancel.

Failed File Export

This notice appears if for any other reason a file export fails (for example if the USB flash drive is disconnected during a transfer).

1.6.9 System operation in Android 11

There are differences in system behavior when you use a display with the Android 11 operating system:

- There is no longer an icon for the applications menu. To access the applications menu, touch and drag upwards from anywhere on the home screen.
- When you touch-and-hold on a file to copy it to a new location, drag the file over the new location and wait for a green + icon.
- Holding the file over a new drive will open the drive and show the sub-directories.
- If the directory that the system opens is higher than the root directory, tap the overflow icon in the upper left corner to access lower directory levels.
- When you navigate to a different location, select the folder and tap the Use This Folder button.
- If you change the display's orientation and tap the Android Overview/Recents button (the onscreen navigation button on the right), the apps will appear upside down. To avoid this, set the display in the correct orientation before using the system.

  If apps are upside down, close and re-open them with the display in the intended orientation.
- The first time that you transfer files from the machine to the display, the display will ask for *All files access* permission. Grant permission.
- Every time you transfer files from the machine to the display, when you select the target folder, the display will ask permission to access the folder. Grant permission.
- If you use FileFlipper to save converted files to a USB drive, the files are not written to the drive until after FileFlipper reports the process is complete. Either:
  - Wait 5 seconds after FileFlipper reports that the process is complete before you remove the USB drive.
  - Eject the USB stick safely: Swipe down to open the quick setting menu, tap the USB stick notification, and then tap the Eject button.

1.7 Using the AR camera

To use the Augmented Reality (AR) camera:

1. Install the hardware. Refer to the *Excavator Cab Install Guide* within the *Excavator Hardware Install Manual.*
2. Install the license. Refer to the *Configuration Guide* within the *Excavator Commissioning Manual*.

3. Enable the camera in the Web Interface's Install Assistant. Refer to the *Excavator Cab Install Guide* within the *Excavator Hardware Install Manual.*
4. Set the camera feed to display on a view pane.
5. Calibrate the camera in the Operator App.

1.7.1 Supported operation

- The camera is available on excavator systems.
- The camera is supported on TD520 displays in any screen layout mode. For the best experience, assign the camera to a larger pane.
- The camera is *not* supported on BYOD displays.
- The camera is *not* supported for guidance using an HS410 heading sensor.
- You cannot zoom the view in or out when using the camera.

1.7.2 Setting the camera feed to display on a view pane

1. Do one of the following:
   - Touch and hold on the work screen. When the pop-up menu appears, tap Layout.
   - Tap the System Settings button and then tap Layout.
2. Set one of the panes to AR Camera view .

1.7.3 Calibrating the AR camera

To calibrate the camera, the system requires you to move the attachment to 4 different positions:

❶ Linkage raised, attachment high on the screen and fairly close to the cab

❷ Linkage lowered, stick vertical and attachment close to the ground

❸ Linkage extended to mid reach, attachment close to ground

❹ Linkage extended to full reach, attachment close to ground

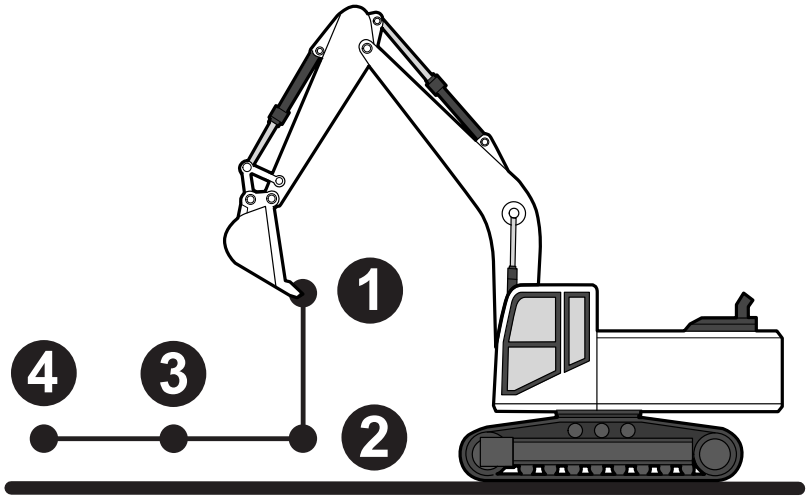

Step 1: Establish an active guidance solution

The calibration process requires an active guidance solution. On the dashboard, ensure that a design is loaded and there are no red tiles before beginning the calibration sequence.

Step 2: Complete the calibration sequence

1. Do one of the following:
   - Tap the Open icon on the Machine Setup screen.
   - From the System Settings menu, select Calibrate AR Camera.

   The first Calibrate AR Camera screen appears.
2. Read the instructions and tap Next.
3. Move the linkage until the attachment is in the position indicated onscreen.
4. On the display, drag a corner of each target until they are aligned with the left and right corners of the cutting edge.
5. Tap Set:
   - The targets' positions are locked in place.
   - A tick appears beside the targets.
   - Two new targets appear.
6. Repeat Steps 3 to 5 for three more attachment positions.
7. Tap Save. The work screen appears showing the AR camera view.

1.7.4 AR camera calibration best practice

WARNING — If the machine enters an avoidance zone during camera calibration, the operator does not receive a warning. Avoid calibrating the AR camera when the machine is near an avoidance zone.

- Avoid moving the machine body during calibration. If the camera position changes during calibration, restart the process.
- During calibration, align the four pairs of targets to the exact position of the attachment corners as accurately as possible. The point positions affect display accuracy.
- For optimum performance, use a straight edged attachment.
- If the cutting edge is wider than the body of the attachment, align the targets to the width of the cutting edge.
- Similarly, if the attachment has teeth, align the targets to the cutting end of the teeth.
- In general, align the targets to the widest part of the attachment and the forward-most part of the attachment. You may need to use a set square or project lines from the cutting edge and attachment side to place the target correctly if the corners are curved.
- For best performance, ensure the TD520 display has firmware OS 4.19.20 or higher.
- Avoid using the camera with an HS410 heading sensor.

TIP – The camera calibration data is saved in a .machine file. If you can access the web interface, save a .machine file when you complete the calibration. This way, if you reload the .machine file it includes the calibration.

1.7.5 AR camera settings

When the AR camera is calibrated, it is ready for use.

To adjust the visibility settings, tap the eye icon in the upper right corner of the work screen. You can adjust:

- Cutting Edge visibility: Turns the cutting edge overlay on or off.
- Design Transparency: Controls the transparency level of the design and grid lines. Move the slider to the right to make the design and grid lines more solid.
- Brightness: Controls the brightness of the camera feed. Move the slider to the right to increase the brightness.

To adjust the visibility of other features that appear on the screen, select the Overlay screen.

1.7.6 Re-enabling the camera

If the AR camera is accidentally disconnected:

1. Reconnect the camera cables.
2. Wait for the camera to turn on and reconnect.
3. Move the attachment to confirm that the camera is operating correctly. If it is not, restart the calibration process.

On some occasions, you may need to restart the EC520 controller.

1.7.7 Troubleshooting

- If the camera view becomes corrupted during calibration, exit the wizard and then return.
- If the camera view stops working during operation, change to a different view on the Layout screen. Then change back to the AR Camera view.
- If you suspect the camera mount has moved, repeat the calibration process.
- If the overlay grid lines do not match the design, or the cutting edge overlay does not align with the actual cutting edge, repeat the calibration process.
- It is possible to complete the calibration without moving the linkage, but the overlay position will be incorrect. Ensure you move the linkage to the position indicated at each stage of the calibration.
- If guidance is lost during calibration, the Next button becomes unavailable.
- For best performance, use landscape orientation for the camera and portrait orientation for the system display.
- If you downgrade the system to an earlier firmware version (for example, v1.11), you must disconnect the SD510 harness from the EC520 harness first. If the SD510 harness remains connected, machine files will fail to load.

1.8 Network

Action bar icons

The Network icons that appear on the action bar show the high-level status of the associated network feature. The icons are:

	Connection Status (cell)	A warning (orange) shows if the connection is not yet established on start-up, or lost during operation.
	Connection Status (Wi-Fi)	
	Cloud Services	A warning (orange) shows if any of the underlying services fail to connect, or if cell/Wi-Fi connection is lost.

Tap an icon to open the Network screen.

Network screen

The connection icons on the Network screen show the 3 parts of the connection:

1. Gateway Device ( ) – the hardware acting as the connection device on your system
   - Error state (red) – device not found
   - Warning state (orange) – the device is configuring or there is an issue with the device configuration
2. Connection – a cell ( ) or Wi-Fi ( ) icon, depending on the gateway configuration
   - Warning state (orange) – there is a missing or unconfigured device, or a problem with the connection to the internet
3. Cloud Services ( ) – the parts of the cloud service
   - Only configured services show in the list
   - Warning state – the last attempt to connect or transfer data failed

Note – The warnings are sequential, so if there is a warning for the Gateway Device, there will also be a warning for Connection Status and Cloud Services.

2

Using Depth and Slope Guidance

In this chapter:

- Using Depth and Slope Mode
- Bench Heading
- Bench Elevation
- Slope and Section Memories
- Touch Point
- Laser Referencing – Transfer Bench
- Offset From Laser

To generate guidance information, the system measures the cutting edge's position relative to a physical reference surface or laser plane. This is called Depth and Slope guidance.

Unlike Design guidance, depth and slope guidance does not rely on knowing the machine's three dimensional location.

2.1 Using Depth and Slope Mode

Depth and Slope mode lets you use slopes, sections, and offsets as required, to define your target grade.

To select Depth and Slope mode:

1. From the Dashboard, tap the Machine Setup tile and select the positioning source that you require.

   Note – The positioning source you select will determine the modes that you can select from the Job Setup screen.
2. From the Dashboard, tap the Job Setup tile.
3. From the Job Setup screen select a project and set the *Mode* field to Depth and Slope.
4. The *Extra Linework (optional)* field displays if you have a 3D guidance solution. This helps you to reference an office design while on the work screen.

   Note – Access to extra linework is enabled or disabled by your technician. 3D line designs are not available to select. Horizontal guidance to the extra linework is not available.
5. Select the appropriate linework from the *Extra Linework (optional)* field.
6. Tap Apply.
7. From the Dashboard, tap Start. The work screen appears.

2.1.1 The work screen

In Depth and Slope mode, this icon appears at the top left-hand side of the work screen:

Touch and hold the icon to open the Job Setup screen.

The Depth and Slope target icons

The target icons always appear in the same order left to right on the guidance bar, as shown below:

Mainfall	Cross Slope	Elevation Offset

Use the target icons in the following ways:

- Tap to cycle through the configured target memories.
- Touch and hold to access the respective target configuration screens.

The target settings screens

- Use the Target Mainfall and Target Cross Slope screens to select, edit or create a new slope. If your system includes a heading sensor or GNSS receiver, you can also select,

edit and create sections.
- If you save a section, you can use it in either the mainfall or the cross slope orientation.
- Use the Elevation Offset screen to select, edit or create a new target offset.
- You can use the increment/decrement elevation offset switch to increase and decrease the offset.

Note – If you switch from Depth and Slope mode to Design mode, the system reverts back to Horizontal and Elevation Offsets of 0.00.

2.1.2 Overlays

The overlays icon is in the top right-hand corner of the guidance bar:

Use this icon to directly access the Overlays screen, which controls what appears on the guidance view.

The guidance view

The guidance view displays the machine relative to the surface being worked. You can set up to three different views to display at once, from the following view types:

- 3D
  Note – The 3D view only renders the design surface for a radius of 150 m (about 500 feet) from the current machine position.
- Cross-section
- Profile
- Plan
- Bubble
- Cut/Fill Focus
- Cut/Fill Left
- Cut/Fill Right
- Cut/Fill Center
- Cut/Fill Center Back

Text items

Use the text ribbon area (across the bottom of the guidance view) to display text items of your choice. By default, the system displays ribbon items appropriate for your machine. Useful text items for Depth and Slope mode are:

- Cut/Fill Center
- Roll
- Rotation

Touch and hold any text item in the text ribbon to open the corresponding context menu:

- Tap Add to select a new text item to add to the text ribbon.
- Tap Replace to select another text item to replace the current one.
- Tap Remove to remove the current text item from the text ribbon.

At the bottom of the context menu, you can tap Go to Text Ribbon . Alternatively you can access it from the System Settings menu . The Text Ribbon screen allows you to:

- Drag-and-drop items to reorder your list. Alternatively, you can drag a text item in the text ribbon to shuffle it.
- Tap Edit to select which items appear.
- Tap Default to reload the default ribbon items for your machine.
- Enable or disable the display of the text ribbon in the work screen.

2.1.3 System settings

The System Settings icon is on the work screen:

Use System Settings to access and configure various functions, including (but not limited to):

- Lightbars
- Units
- File Transfer
- Increments (where the inc/dec switches step size can be set)

The shortcut bar

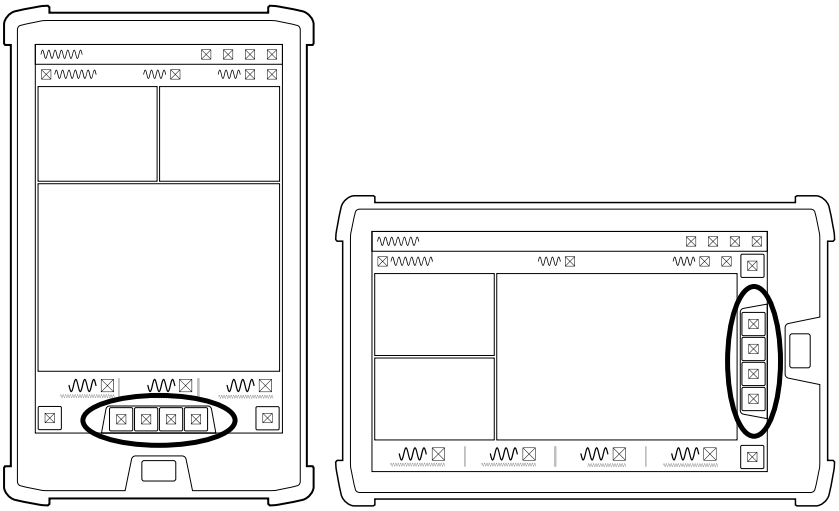

The shortcut bar enables you to easily perform frequently repeated tasks. The shortcut icons are for Depth and Slope relevant items such as Bench Elevation, Bench Heading, and Attachment Focus.

If a shortcut icon is blue, then you must configure that function before the system provides guidance for your machine. To do this, tap the blue icon to complete that function or touch and hold the icon to open the relevant settings screen and then edit as required.

2.1.4 The Back icon

The Back icon is in the top left-hand side of the title bar:

You can tap the icon or title to return to the previous screen; either the Dashboard or work screen.

Work settings

The Work Settings icon is in the lower right-hand side of the work screen:

Use the Work Settings menu to access and configure those settings that change according to the requirements of each individual task, including (but not limited to):

- Bench Heading
- Touch Point
- Measure Mode

2.1.5 For more information

See these following chapters:

- 2.2 Bench Heading
- 2.3 Bench Elevation

2.2 Bench Heading

In Depth and Slope mode, if you have GNSS or a heading sensor, you must bench the heading before you begin working.

Benching the heading sets the direction of the design mainfall. The system calculates target slopes from the benched direction even during machine rotation. You can use the current direction of the machine to bench, or if you have GNSS receivers, choose two points on the ground.

TIP – Using the Two Point Method is more accurate as it defines the direction of the bench heading.

Note – If you have 3D sensors, in the Bench Heading screen, the Current Heading displays relative to grid north. However, if you have a heading sensor it displays relative to magnetic north.

2.2.1 One point method

You can access the Bench Heading screen via the Work Settings menu or the shortcut bar.

Note – If you tap the Bench Heading icon it will bench the heading directly. However, if you touch and hold it, you will open the Bench Heading screen.

1. Position the machine in the direction of the design mainfall.
2. Tap the Bench Heading icon in the shortcut bar to bench the heading directly. This clears the current bench and sets a new bench heading along the line of the linkage.

Alternatively:

1. Touch and hold the Bench Heading icon in the shortcut bar to open the Bench Heading screen.
2. Tap Bench.

2.2.2 Two point method

If you have GNSS receivers, use the two point method to bench the heading as this method is more accurate than the one point method.

You can access the Bench Heading screen via the Work Settings menu or the shortcut bar.

1. Position the machine in the direction of the design mainfall.
2. Touch and hold the Bench Heading icon in the shortcut bar to open the Bench Heading screen.
3. Toggle the Two-Point Method on.
4. Follow the wizard to select two points:
    a. Touch the attachment focus point on two points that are not too close together (there should be at least one meter between the two points). The mainfall runs parallel to the line between the two points and the cross slope is perpendicular to it.

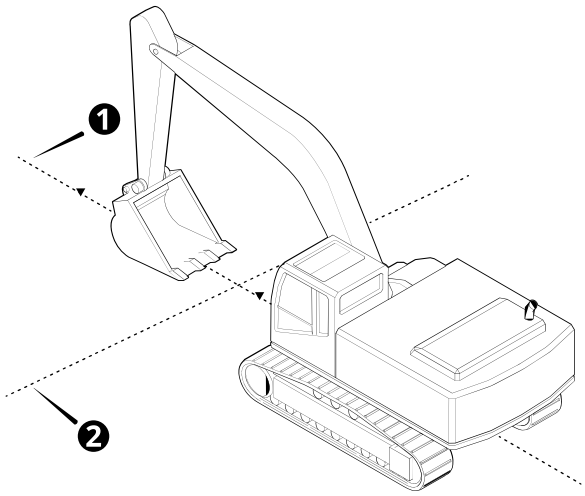

❶	Mainfall	❷	Cross slope

b. Make sure that the only machine movement between point one and two is from the stick and boom (no slew).

5. Tap Bench.

2.2.3 When to re-bench your heading

If you only have a single GNSS receiver, you must re-bench your heading whenever you move the machine tracks.

If you have 2D as the positioning source and a Cat rotation sensor or HS410 heading sensor, you must re-bench your heading whenever you move the machine tracks off the benched alignment.

2.2.4 Useful text items

Text items display information on the work screen. When you bench the heading the following text item can be helpful: Rotation.

2.2.5 Troubleshooting

The table below lists some of the error messages that may appear when you use the two point method to bench the heading.

Error Message	Action
Too much movement	Machine movement between point one and two should only be through the stick and boom (i.e. no slew).

Error Message	Action
Point 2 not saved, bench points are too close	Select a second point that is further away from point one. There should be at least one meter between the two points.

2.3 Bench Elevation

In Depth and Slope mode, before you begin working, or whenever you move the machine to a new working position without GNSS in use, you must bench or re-bench the machine.

Until you bench, no guidance information is available, and the Bench Elevation message appears.

To bench, use either of the methods described in the following table:

Bench method	Description
Bench with a relative elevation	Place your attachment focus on any point. This sets Cut/Fill to 0.00 at that position and you can enter an offset above or below the benched height to get guidance to.
Bench with a reference elevation (known elevation)	Place your attachment focus on a benchmark with a known elevation. This sets Cut/Fill to 0.00 at that position and you can then enter a known elevation to get guidance to (instead of an offset away from the benched position).

Note – If you have a GNSS receiver or heading sensor, you need to bench the heading before you can bench the elevation.

2.3.1 Bench with a relative elevation

Using the Bench Elevation screen

TIP – You can use the bench elevation switch to bench the elevation.

You can access the Bench Elevation screen via the Work Settings menu or the shortcut bar.

Once you have positioned your machine, in the work screen:

Tap the Bench Elevation icon in the shortcut bar to bench the attachment focus directly. This sets Cut/Fill to 0.00 and you can enter an offset above or below the benched height to get guidance to.

Alternatively:

1. Touch and hold the Bench Elevation icon in the shortcut bar to open the Bench Elevation screen.
2. Select the Guidance Focus.
3. Tap Bench.

Select a bench point

The bench point can be any arbitrary point, it does not even have to be a physical object.

If you use a physical object as the bench point, use something that is solid and will not move when you touch it with the attachment.

Position the machine

Place the machine so that it is within reach of the bench point and the surface to work.

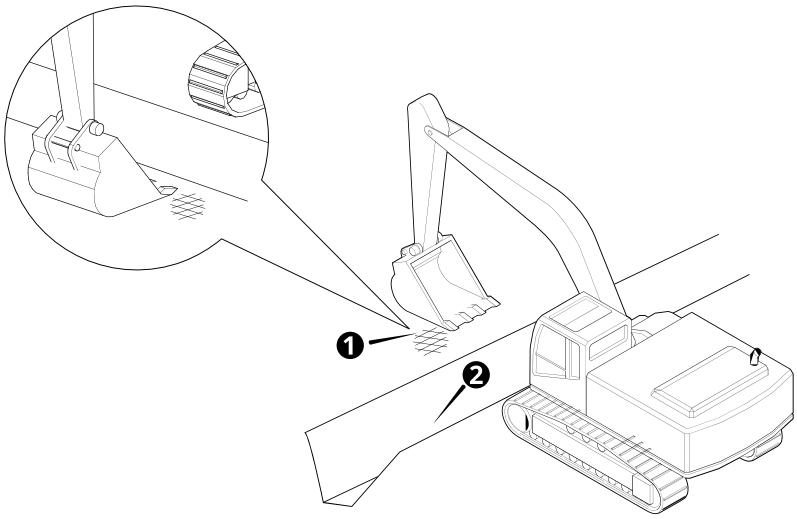

1	Bench point	2	Surface to work

If using a section, orient the machine with the front linkage perpendicular to the mainfall of the section.

If using a slope, orient the machine with the front linkage parallel to the mainfall of the slope.

Position the attachment

Position the attachment focus on your bench point.

2.3.2 Bench with a reference elevation (known elevation)

Using the Bench Elevation screen

TIP – You can use the bench elevation switch to bench the elevation.

You can access the Bench Elevation screen via the Work Settings menu or the shortcut bar.

Once you have positioned your machine and attachment, in the work screen:

1. Touch and hold the Bench Elevation icon in the shortcut bar to open the Bench Elevation screen.
2. Select the Guidance Focus.
3. Toggle Clear Offset on Bench off to keep your previous elevation offset after benching. The system remembers your selection for future use.
4. Toggle the Reference Elevation on and enter the value.
5. Tap Bench.

   This sets Cut/Fill to 0.00 at that position and you can then enter a known elevation to get guidance to.

To use the previous reference elevation value to re-bench the attachment focus, tap the Bench Elevation Reference icon in the shortcut bar.

Select a benchmark

The benchmark is a known or absolute point in the system. Select a benchmark with a known elevation e.g. get a surveyor to measure the elevation of the benchmark.

If possible, the benchmark should be something solid that will not move when you touch it with the attachment.

Position the machine

Place the machine so that is within reach of the benchmark and the surface to work.

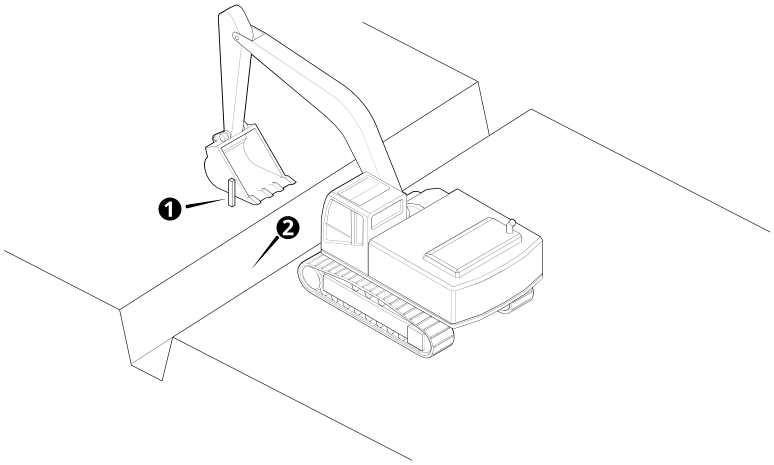

❶ Benchmark ❷ Surface to work

If using a section, orient the machine with the front linkage perpendicular to the mainfall of the section.

If using a slope, orient the machine with the front linkage parallel to the mainfall of the slope.

Position the attachment

Position the attachment focus so that it is touching your benchmark.

If your benchmark is a survey peg or something that could move when touched, position the attachment on the ground, as close to the peg as possible.

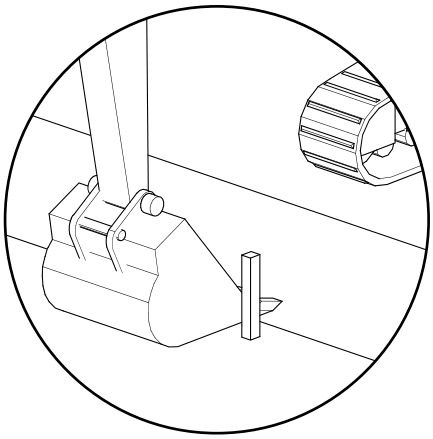

Alternatively:

1. Position the attachment focus above your benchmark.
2. Measure the height from the benchmark to the attachment focus.
3. Add the measured height to the height of the benchmark.
4. Use this measurement as the Reference Elevation.

2.3.3 When to re-bench your elevation

If you use GNSS in Depth and Slope mode you only need to bench once before you begin working.

If you do not use GNSS, you must re-bench your elevation whenever you move the machine tracks; use either the original bench point, Touch Point, or a laser plane.

2.3.4 Placement of sections at the bench point

If you have created a section on the target mainfall or target cross slope, the system locates the placement point of the section at the benching point.

2.3.5 Useful text items

Text items display information on the work screen. When you bench the elevation the following text items can be helpful:

- Cut/Fill <Center/Left/Right>
- Distance from bench
- Height from bench

2.4 Slope and Section Memories

You can store cross slope or mainfall values in cross slope or mainfall slope memories respectively. These memories are only accessible when you use Depth and Slope mode.

If you have GNSS or a heading sensor you can also store section memories.

You can access slope and section memories via the Memories button on the Target Mainfall and Target Cross Slope screens.

You can save a slope or section memory as you perform certain tasks. For example, you can store a slope mainfall memory whenever you use Measure Mode to measure site features.

2.4.1 Mainfall memories

Select and apply a memory

You can select and apply mainfall memories via the Target Mainfall screen. There is always at least one memory stored.

Select the memory you require and tap Apply.

Save a slope memory

You can save a slope memory via the Save button on the Target Mainfall screen. When you save a slope memory, the system automatically assigns it the next available name, for example: Mainfall 2. If you want to edit the name, see Edit or rename a slope memory.

Create a new slope memory

To create a new slope memory:

1. In the Target Mainfall screen, tap the Memories icon on the right-hand side of the *Memory* field. The Mainfall Memories screen opens.
2. Tap Create. The Create Mainfall Memory screen opens. The system automatically assigns the next available name to the memory, for example: Mainfall 2.
3. If required, tap inside the *Name* field and edit the name.
4. Either use the arrows to increment or decrement the mainfall value, or tap inside the field to enter the value directly.
5. Tap Save. The Mainfall Memories screen appears and the memory has focus.

Edit or rename a slope memory

To edit a slope memory:

1. In the Target Mainfall screen, tap the Memories icon on the right-hand side of the *Memory* field. The Mainfall Memories screen opens.
2. Select a Mainfall memory and tap the overflow icon on the right-hand side of the memory. Select Edit. The Edit Mainfall Memory screen opens.
3. If required, tap inside the *Name* field and edit the name.
4. If required, edit the value of the mainfall.
5. Tap Save. The Mainfall Memories screen appears and the memory you edited has focus.

2.4.2 Cross slope memories

Select and apply a slope memory

You can select and apply cross slope memories via the Target Cross Slope screen. There is always at least one memory stored.

Select the memory you require and tap Apply.

Save a slope memory

You can save a memory via the Save button on the Target Cross Slope screen. When you save a slope memory, the system automatically assigns it the next available name, for example: Cross slope 2. If you want to edit the name, see Edit or rename a slope memory.

Create a new slope memory

To create a new slope memory:

1. In the Target Cross Slope screen, tap the Memories icon on the right-hand side of the *Memory* field. The Cross Slope Memories screen opens.
2. Tap Create. The Create Cross Slope Memory screen opens. The system automatically assigns the next available name to the memory, for example: Cross Slope 2.
3. If required, tap inside the *Name* field and edit the name.
4. Either use the arrows to increment or decrement the mainfall value, or tap inside the field to enter the value directly.
5. Tap Save. The Cross Slope Memories screen appears and the memory has focus.

Edit or rename a slope memory

To edit a slope memory:

1. In the Target Cross Slope screen, tap the Memories icon on the right-hand side of the *Memory* field. The Cross Slope Memories screen opens.
2. Select a cross slope memory and tap the overflow icon on the right-hand side of the memory. Select Edit. The Edit Cross Slope Memory screen opens.
3. If required, tap inside the *Name* field and edit the name.
4. If required, edit the value of the mainfall.
5. Tap Save. The Cross Slope Memories screen appears and the memory you edited has focus.

2.4.3 Section memories

Sections are templates that let you build roads, banks and channels. A section can be made up of any number of reach and elevation points.

Each section has a placement point . The placement point configures how the section profile is applied relative to the current attachment focus. When you bench, the placement point of the section is the benching point. The section is applied perpendicular to the direction of the machine heading.

Select and apply a section memory

You can select and apply section memories via the Target Cross Slope or Target Mainfall screen. Select Section from the Type drop-down list.

There is always at least one memory stored. Select the memory you require and tap Apply.

To edit the placement point of the section, tap the Previous Point and Next Point icons.

Create a new section memory

If you want to create a new memory:

1. In the Target Cross Slope or Target Mainfall screen, select Section from the Type drop-down list.
2. Tap the Memories icon on the right-hand side of the *Memory* field. The Section Memories screen opens.
3. Tap Create.
4. To create a new memory, use one of the methods described in the following table.

Icon	Description
	On-screen mode. Use your finger directly on the screen to define section points.
	Slope and Section Memories. Use the machine attachment focus to define section points.
	Templates mode. Use an existing section memory as a template. You can edit it and save it as a new section memory.

Drawing modes

The different drawing modes described in the table below are common to each of the section creation modes.

By default, the edit line drawing mode is selected. Tap to select the drawing mode you prefer.

Icon	Mode and description
	Edit Point. In edit point mode you use coordinates to specify a points position (like rise over run).
	Edit Line. In edit line mode you use an angle and a slope distance from the previous point to specify a points position.
	Scale All. In scale all mode you use a width and a height to specify the sections size.

Common drawing tools

The icons on the bottom of the drawing screen provide useful tools to assist with the drawing of the section. The following icons are common to all section creation modes.

Icon	Description
	Tap to undo the last action.
	Tap to mirror the existing points. You can select between mirror from the end point or mirror from the origin point.
	Tap to view all the points in the section.
	Lock to grid. When lock to grid is active new points are placed on the nearest intersection of the drawing grid. When don't lock to grid is active new points are placed anywhere in the drawing window. Tap to switch between the modes. *Note – Lock to grid does not work with focus mode. The point will always be placed at the precise location of the attachment focus.*

On-screen mode

You can draw points directly on the screen with your finger to create a new section memory.

Before you start, select the drawing mode that you prefer, as explained in Drawing modes.

Tap inside any of the fields to directly edit it. For example, the system automatically assigns the next available name to the memory, such as, Section 2. Tap inside the field to bring up the on-screen keyboard and rename it.

The cursor identifies the active point on the section. The starting point of a section is always zeroed and any additional points that you add are relative to the start point.

Every time you lift your finger from the screen or pause for a couple of seconds with your finger still on the screen, a new point is added to the section.

Tap to delete a selected point or double tap individual points to delete them.

Note – You cannot delete the starting point.

The icons on the bottom of the drawing screen provide useful tools to assist with the drawing of the section. See Common drawing tools

Tap Save when you are finished.

Focus mode

You can use the attachment focus to create a new section memory.

Before you start, select the drawing mode that you prefer, as explained in Drawing modes.

Tap inside any of the fields to directly edit it. For example, the system automatically assigns the next available name to the memory, such as, Section 2. Tap inside the field to bring up the on-screen keyboard and rename it.

The cursor identifies the active point on the section. The starting point of a section is always zeroed and any additional points that you add with the attachment focus are relative to the start point.

Before you start, make sure that you select the correct attachment focus. Tap the Focus icon to select an alternative focus point.

Every time you move the machine attachment to the next point in the section, tap the Add Point icon .

After you use the attachment focus to create a point, you can use your finger on the screen to edit it. Tap on the point you want to edit. You can either edit the numeric fields directly or you can touch and hold the point with your finger on the screen and then drag and drop it to its new position.

TIPS:

- Touch and hold the point you want to edit until its color changes to yellow before you try to drag and drop it to its new position.
- Zoom in to place your points more accurately. The resolution of the grid will get finer as you zoom in.

Note – The lock to grid setting will affect the positioning of the point when dragging and dropping.

The icons on the bottom of the drawing screen provide useful tools to assist with the drawing of the section. See Common drawing tools.

Tap Save when you are finished.

Templates mode

You can use an existing section memory as a template. You can then edit and save it as a new section memory.

Select the section that you want to use as a template.

Select the drawing mode that you prefer, as explained in Drawing modes.

Tap inside any of the fields to directly edit it. For example, the system automatically assigns the next available name to the memory, such as, Section 2. Tap inside the field to bring up the on-screen keyboard and rename it.

The cursor identifies the active point on the section. The starting point of a section is always zeroed and any additional points that you add are relative to the start point.

Tap on any point that you want to edit. You can either edit the numeric fields directly or you can touch and hold the point with your finger and then drag and drop it to its new position.

TIPS:

- Touch and hold the point you want to edit until its color changes to yellow before you try to drag and drop it to its new position.
- Zoom in to place your points more accurately. The resolution of the grid will get finer as you zoom in.

Note – The lock to grid setting will affect the positioning of the point when dragging and dropping.

Tap to delete a selected point or double tap individual points to delete them.

Note – You cannot delete the starting point.

The icons on the bottom of the drawing screen provide useful tools to assist with the drawing of the section. See Common drawing tools.

Tap Save when you are finished.

Edit a section memory

To edit a section memory:

1. In the Target Cross Slope or Target Mainfall screen, select Section from the Type drop-down list.
2. Tap the Memories icon on the right-hand side of the *Memory* field. The Section Memories screen opens.
3. Select a section and tap the overflow icon on the right-hand side of the memory. Select Edit. The Edit Section screen opens.
4. Tap inside any of the fields to directly edit them.

5. Tap on the point you want to edit. You can either edit the numeric fields directly or you can touch and hold the point with your finger on the screen and then drag and drop it to its new position.

   TIPS:
   - Touch and hold the point you want to edit until its color changes to yellow before you try to drag and drop it to its new position.
   - Zoom in to place your points more accurately. The resolution of the grid will get finer as you zoom in.

   Note – The lock to grid setting will affect the positioning of the point when dragging and dropping.
6. Tap Save. The Section Memories screen appears and the memory you edited has focus.

2.5 Touch Point

You can use Touch Point to transfer a bench elevation via a common hard point when you use Depth and Slope mode without a laser catcher.

Touch Point is only available after you bench the system and requires a common feature, such as a rock, that you can easily access from both your original working position and your new working position.

The following diagram shows the typical workflow:

1. Bench elevation.
2. Set the initial Touch Point (common point from the original working position). This becomes the reference elevation.
3. Move the machine and regain the Touch Point (common point from the new working position). The elevation of the machine is now re-benched to the original bench elevation.

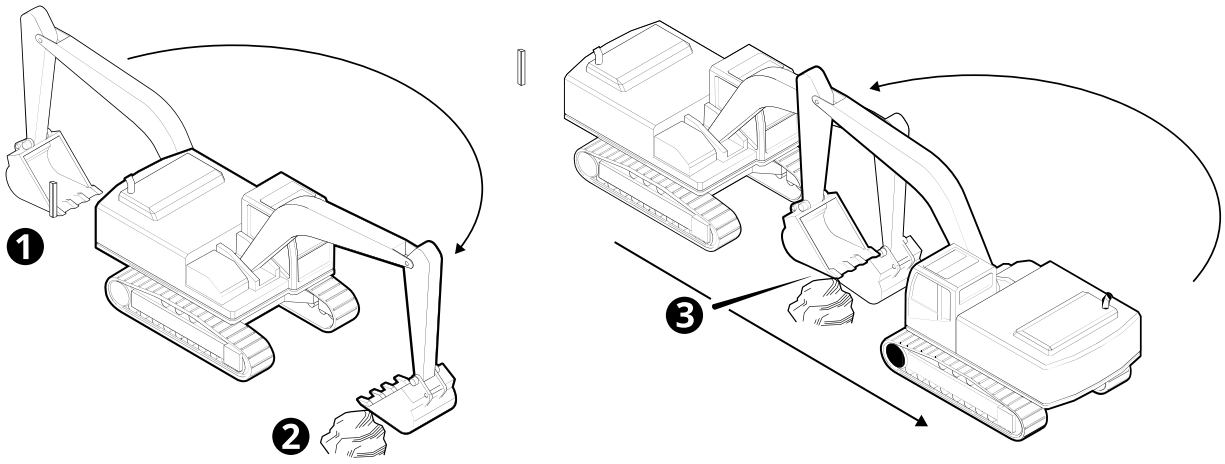

❶ Bench elevation	❷ Set the initial Touch Point	❸ Regain the Touch Point

2.5.1 Rotation limitations

If you do not have a heading sensor you cannot rotate the cab when you move from one working position to another and must reach the Touch Point in the digging orientation of the excavator front linkage.

2.5.2 Using Touch Point

You can access the Touch Point screen via the Work Settings menu or the shortcut bar.

Note – If you tap the Touch Point icon the reference elevation is automatically set. However, if you touch and hold it , you will need to manually set the reference elevation.

Note – The machine should already be benched.

Note – If you have a laser catcher, when there is a valid laser strike the Accept Laser Strike or Decline Laser Strike icons will temporarily replace the Touch Point icon in the shortcut bar.

1. Select a common point to transfer the bench elevation to. This point should be:
   a. Within reach of both your current working position (and bench elevation) and your new working position.
   b. A stable point that will not move, for example a large rock.
2. If you do not have a heading sensor and you are on a slope, position the front linkage parallel to the mainfall of the slope (do not rotate the cab). The machine should be in its as benched orientation.
3. Position the attachment focus on the Touch Point (common point).
4. Tap the Touch Point icon in the shortcut bar to set the common point as the reference elevation.

   The reference elevation is automatically set and the Touch Point Set notification message appears.
5. Move the machine to your new working position and place the attachment focus on the same Touch Point (common point).

   Note – If you do not have a heading sensor, ensure that you do not rotate the cab. You must reach the Touch Point in the digging orientation of the front linkage.
6. Tap the Touch Point icon in the shortcut bar again to regain the Touch Point.

   The reference elevation is transferred and the Touch Point Confirmed notification message appears.
7. You can now work the surface relative to the original bench. Do not move the tracks. Only rotate the cab if you have a heading sensor.

Note – You can repeat these steps every time you move the machine. However, each time you use Touch Point there is a chance that you lose accuracy. The more times you use it without benching, the greater the chance that you introduce error.

Alternatively:

1. Touch and hold the Touch Point icon in the shortcut bar to open the *Touch Point* screen.
2. Position the attachment focus on the Touch Point (common point).
3. Tap Set. The common point becomes the reference elevation.
4. Tap Next.
5. Move the machine to your new working position and place the attachment focus on the same Touch Point (common point).

   Note – If you do not have a heading sensor, ensure that you do not rotate the cab. You must reach the Touch Point in the digging orientation of the excavator front linkage.
6. If required, select the attachment focus position; or you can use the attachment focus switch or the Focus icon to change the attachment focus.
7. If you have a swing boom, select the swing boom position.
8. Tap Regain. The reference elevation is transferred.
9. Tap Done. You can now work the surface relative to the original bench. Do not move the tracks. Only rotate the cab if you have a heading sensor.

2.5.3 Text items

Text items display information on the work screen. When you use Touch Point the following text items can be helpful:

- Cut/Fill center
- Attachment Slope
- Heading
- Rotation (heading sensor only)

2.6 Laser Referencing – Transfer Bench

If you bench the attachment focus on a point on the ground, you can use laser referencing to transfer the benchmark elevation as you move around the site.

Using a laser plane is the most flexible method for transferring the benchmark elevation.

To use a laser you need a laser catcher installed and enabled on your machine, and a laser transmitter set up correctly to provide the laser plane.

TIP – For information on offset from laser, see *2.7 Offset From Laser*.

2.6.1 Rotation limitations

If the system is not equipped with an HS410 heading sensor or a Cat 07 rotation sensor, you should not rotate the cab if you have a target cross slope or mainfall. The system applies the mainfall slope in the direction of the front linkage. If you rotate the cab, the target slopes rotate with you and you will dig yourself to the top or the bottom of a cone.

2.6.2 Laser icons

The shortcut bar displays different laser icon states. The behavior of the system depends on the mode set in the Laser screen. If Auto Accept mode is on, you will see the letter A next to the laser icon in the shortcut bar.

TIP – With Auto Accept mode on, you don't need to take your hands off the controls to accept a laser strike.

If Auto Accept Mode is turned on and the laser catcher detects a laser strike, after five seconds the system automatically accepts the elevation reference. If you do not want to use the laser strike, tap the Decline Laser icon within five seconds.

If Auto Accept mode is off, the system automatically rejects a valid laser strike within five seconds. Should you want to accept the laser strike, tap the Accept Laser Strike icon within five seconds.

Note – The laser catcher will not register a second laser strike within five seconds of being in the strike zone. This prevents unwanted alerts. To detect a new laser strike, remove the laser catcher from the strike zone for five seconds.

2.6.3 Transfer bench information for level surfaces

If the target surface you wish to build is level then make sure the laser plane is also level.

Preparing the laser transmitter

1. Position the laser transmitter with a clear view to the laser catcher.
   Typically the maximum distance between the laser transmitter and the laser catcher is 300m (984 ft). For more information about the maximum distance for your transmitter, refer to the documentation that came with your laser.
2. Set the laser transmitter at a height that prevents the beam from flashing directly into people's eyes.
3. Configure the laser transmitter so that the mainfall axis and cross slope axis are set to zero.

NOTES:

Laser guidance accuracy decreases:

- As the laser catcher distance from the laser transmitter increases.
- As the angle of the laser catcher on the excavator stick deviates from perpendicular to the laser beam.
- If a laser transmitter with a lower accuracy grade of ± 0.7 mm at 30 m (0.03 inches at 98.4 ft) is used. For example, do not use anything lower than a Spectra Precision GL722.

Using laser guidance

WARNING — Do not stare into the laser beam when the laser transmitter is operating. For more information, refer to the documentation that came with your laser.

1. In the Machine Setup screen, select 2D as the positioning source and ensure that Laser Catcher is enabled.
2. Check the guidance bar to make sure that your target cross slope and target mainfall slopes are both set to zero (Level).
3. Position the machine so that it can catch the laser strikes.

   The laser catcher (mounted on the stick of the machine) needs to pass through the plane from the laser transmitter.
4. Bench the machine via the Bench Elevation screen.
5. If you have an aftermarket system, activate laser mode by passing the laser catcher through the plane of the laser transmitter. The Initializing Laser Catcher notification appears. You are ready now to catch a laser strike.

   Note – If you restart the EC520, change the positioning source or change the attachment type between a bucket, tilt bucket or tiltrotator bucket you will deactivate laser mode.
6. Before you move the machine from the location in which it was benched, raise/lower the boom and stick until the laser catcher accepts a valid laser strike.

   Best practice for easily catching the laser is to try and keep the laser catcher near vertical, do not move too quickly through the laser beam.

   TIPS:
   - The right hand lightbar will help guide you to the laser plane as you get close to it. The buzzer will also sound when laser strikes are received.
   - For best accuracy, use the same direction of boom movement when accepting laser strikes, especially if Auto Accept Mode is on.
7. If Auto Accept Mode is off, accept the laser strike (within five seconds).

8. Move the machine to the new working location, and rotate the cab into the correct orientation for benching.
9. Raise/lower the boom and stick until the laser catcher accepts a valid laser strike.

   The system is now benched against the original benchmark elevation. Repeat this step every time you move the machine tracks.

2.6.4 Transfer bench information for sloping surfaces and sections

If the target surface you wish to build has a slope or section then make sure the slope of the laser plane is:

- Parallel to the slope of the target surface
- The same as the slope of the target surface (for example, if the slope of the target surface is 15% the laser grade must also be 15%).

Preparing the laser transmitter

1. Position the laser transmitter with a clear view to the laser catcher.

   Typically the maximum distance between the laser transmitter and the laser catcher is 300m (984 ft). For more information about the maximum distance for your transmitter, refer to the documentation that came with your laser.
2. Set the laser transmitter at a height that prevents the beam from flashing directly into people's eyes.
3. Configure the laser transmitter so that the:
   - Mainfall axis and cross slope axis match the mainfall and cross slope of your design.
   - If you have a section, set the laser slope in the direction of the section to zero.

NOTES:

Laser guidance accuracy decreases:

- As the laser catcher distance from the laser transmitter increases.
- As the angle of the laser catcher on the excavator stick deviates from perpendicular to the laser beam.
- If a laser transmitter with a lower accuracy grade of ± 0.7 mm at 30 m (0.03 inches at 98.4 ft) is used. For example, do not use anything lower than a Spectra Precision GL722.

Using laser guidance

WARNING — Do not stare into the laser beam when the laser transmitter is operating. For more information, refer to the documentation that came with your laser.

1. In the Machine Setup screen, select 2D as the positioning source and ensure that Laser Catcher is enabled.
2. Check the guidance bar to make sure you have set your target cross slope and target mainfall slopes.
3. Position the machine so that:
   a. It can catch the laser strikes.

      The laser catcher (mounted on the stick of the machine) needs to pass through the plane from the laser transmitter.
   b. The excavator is pointing in the correct direction (the excavator front linkage is parallel to the mainfall).
4. Do not rotate the cab.

   If you rotate the cab, the target slopes rotate with you and you will dig yourself to the top or the bottom of a cone.
5. Bench the machine via the Bench Elevation screen.
6. If you have an aftermarket system, activate laser mode by passing the laser catcher through the plane of the laser transmitter. The Initializing Laser Catcher notification appears. You are ready now to catch a laser strike.

   Note – If you restart the EC520, change the positioning source or change the attachment type between a bucket, tilt bucket or tiltrotator bucket you will deactivate laser mode.
7. Before you move the machine from the location in which it was benched, raise/lower the boom and stick until the laser catcher accepts a valid laser strike.

   Best practice for easily catching the laser is to try and keep the laser catcher near vertical, do not move too quickly through the laser beam.

   TIPS:
   - The right hand lightbar will help guide you to the laser plane as you get close to it. The buzzer will also sound when laser strikes are received.
   - For best accuracy, use the same direction of boom movement when accepting laser strikes, especially if Auto Accept Mode is on.
8. If Auto Accept Mode is off, accept the laser strike (within five seconds).
9. Move the machine to the new working location, and rotate the cab into the correct orientation for benching.
10. Raise/lower the boom and stick until the laser catcher accepts a valid laser strike.

    The system is now benched against the original benchmark elevation. Repeat this step every time you move the machine tracks.

2.7 Offset From Laser

When you establish an elevation reference from a laser plane, the system calculates all target offsets directly from the height of the laser plane.

To use a laser you need a laser catcher installed and enabled on your machine, and a laser transmitter set up correctly to provide the laser plane.

TIP – For information on transferring a bench via laser, see *2.6 Laser Referencing – Transfer Bench*.

2.7.1 Rotation limitations

If the system is not equipped with an HS410 heading sensor or a Cat 07 rotation sensor, you should not rotate the cab if you have a target cross slope or mainfall. The system applies the mainfall slope in the direction of the front linkage. If you rotate the cab, the target slopes rotate with you and you will dig yourself to the top or the bottom of a cone.

2.7.2 Laser icons

The shortcut bar displays different laser icon states. The behavior of the system depends on the mode set in the Laser screen. If Auto Accept mode is on, you will see the letter A next to the laser icon in the shortcut bar.

TIP – With Auto Accept mode on, you don't need to take your hands off the controls to accept a laser strike.

If Auto Accept Mode is turned on and the laser catcher detects a laser strike, after five seconds the system automatically accepts the elevation reference. If you do not want to use the laser strike, tap the Decline Laser icon within five seconds.

If Auto Accept mode is off, the system automatically rejects a valid laser strike within five seconds. Should you want to accept the laser strike, tap the Accept Laser Strike icon within five seconds.

Note – The laser catcher will not register a second laser strike within five seconds of being in the strike zone. This prevents unwanted alerts. To detect a new laser strike, remove the laser catcher from the strike zone for five seconds.

2.7.3 Using offset from laser for level surfaces

If the target surface you wish to build is level then make sure the laser plane is also level.

Preparing the laser transmitter

1. Position the laser transmitter with a clear view to the laser catcher.
   Typically the maximum distance between the laser transmitter and the laser catcher is 300m (984 ft). For more information about the maximum distance for your transmitter, refer to the documentation that came with your laser.

2. Set the laser transmitter at a height that prevents the beam from flashing directly into people's eyes.
3. Configure the laser transmitter so that the mainfall axis and cross slope axis are set to zero.

NOTES:

Laser guidance accuracy decreases:

- As the laser catcher distance from the laser transmitter increases.
- As the angle of the laser catcher on the excavator stick deviates from perpendicular to the laser beam.
- If a laser transmitter with a lower accuracy grade of ± 0.7 mm at 30 m (0.03 inches at 98.4 ft) is used. For example, do not use anything lower than a Spectra Precision GL722.

Using laser guidance

WARNING — Do not stare into the laser beam when the laser transmitter is operating. For more information, refer to the documentation that came with your laser.

1. In the Machine Setup screen, select 2D as the positioning source and ensure that Laser Catcher is enabled.
2. Check the guidance bar to make sure that your target cross slope and target mainfall slopes are both set to zero (level).
3. Clear any existing benches via the Bench Elevation screen.
4. Position the machine so that:
   a. It can catch the laser strikes.
      The laser catcher (mounted on the stick of the machine) needs to pass through the plane from the laser transmitter.
   b. It is within reach of the surface to work.
5. If you have an aftermarket system, activate laser mode by passing the laser catcher through the plane of the laser transmitter. The Initializing Laser Catcher notification appears. You are ready now to catch a laser strike.

   Note – If you restart the EC520, change the positioning source or change the attachment type between a bucket, tilt bucket or tiltrotator bucket you will deactivate laser mode.
6. Raise/lower the boom and stick until the laser catcher accepts a valid laser strike. You may rotate the cab.

   Best practice for easily catching the laser is to try and keep the laser catcher near vertical, do not move too quickly through the laser beam.

TIPS:

- The right hand lightbar will help guide you to the laser plane as you get close to it. The buzzer will also sound when laser strikes are received.
- For best accuracy, use the same direction of boom movement when accepting laser strikes, especially if Auto Accept Mode is on.

7. If Auto Accept Mode is off, accept the laser strike (within five seconds).

   The laser strike elevation is accepted as the reference elevation, and all depths are relative to the laser plane.
8. Before and after you move the machine tracks, catch the laser to re-establish the elevation.

2.7.4 Using offset from laser for sloping surfaces and sections

If the target surface you wish to build has a slope or section then make sure the slope of the laser plane is:

- Parallel to the slope of the target surface
- The same as the slope of the target surface (for example, if the slope of the target surface is 15% the laser plane must also be 15%).

Preparing the laser transmitter

1. Position the laser transmitter with a clear view to the laser catcher.

   Typically the maximum distance between the laser transmitter and the laser catcher is 300m (984 ft). For more information about the maximum distance for your transmitter, refer to the documentation that came with your laser.
2. Set the laser transmitter at a height that prevents the beam from flashing directly into people's eyes.
3. Configure the laser transmitter so that the:
   - Mainfall axis and cross slope axis match the mainfall and cross slope of your design.
   - If you have a section, set the laser slope in the direction of the section to zero.

NOTES:

Laser guidance accuracy decreases:

- As the laser catcher distance from the laser transmitter increases.
- As the angle of the laser catcher on the excavator stick deviates from perpendicular to the laser beam.
- If a laser transmitter with a lower accuracy grade of ± 0.7 mm at 30 m (0.03 inches at 98.4 ft) is used. For example, do not use anything lower than a Spectra Precision GL722.

Using laser guidance

WARNING — Do not stare into the laser beam when the laser transmitter is operating. For more information, refer to the documentation that came with your laser.

1. In the Machine Setup screen, select 2D as the positioning source and ensure that Laser Catcher is enabled.
2. Check the guidance bar to make sure you have set your target cross slope and target mainfall slopes.
3. Clear any existing benches via the Bench Elevation screen.
4. Position the machine so that:
   a. It can catch the laser strikes.

      The laser catcher (mounted on the stick of the machine) needs to pass through the plane from the laser transmitter.
   b. It is within reach of the surface to work.
   c. The excavator is pointing in the correct direction (the excavator front linkage is parallel to the mainfall).
5. Do not rotate the cab.

   If you rotate the cab, the target slopes rotate with you and you will dig yourself to the top or the bottom of a cone.
6. If you have an aftermarket system, activate laser mode by passing the laser catcher through the plane of the laser transmitter. The Initializing Laser Catcher notification appears. You are ready now to catch a laser strike.

   Note – If you restart the EC520, change the positioning source or change the attachment type between a bucket, tilt bucket or tiltrotator bucket you will deactivate laser mode.
7. Raise/lower the boom and stick until the laser catcher accepts a valid laser strike.

   Best practice for easily catching the laser is to try and keep the laser catcher near vertical, do not move too quickly through the laser beam.

   TIPS:
   - The right hand lightbar will help guide you to the laser plane as you get close to it. The buzzer will also sound when laser strikes are received.
   - For best accuracy, use the same direction of boom movement when accepting laser strikes, especially if Auto Accept Mode is on.
8. If Auto Accept Mode is off, accept the laser strike (within five seconds).

   The laser strike elevation is accepted as the reference elevation, and all depths are relative to the laser plane.
9. Before and after you move the machine tracks, catch the laser to re-establish the elevation.

3

Using Infield Guidance

In this chapter:

- Infield Designs

This chapter introduces the use of infield designs.

3.1 Infield Designs

Infield designs enable you to create 3D designs in the cab. Using the design wizard, you can create a simple design surface or a complex alignment with a cross-section applied to it.

To begin creating an infield design, do the following:

1. In the Job Setup screen, select a project and then go to the *Mode* field and select Infield.

   The *Extra Linework (optional)* field displays if you have a 3D guidance solution. This helps you to reference an office design on the work screen.

   Note – Access to extra linework is enabled or disabled by your technician. 3D line designs are not available to select. Horizontal guidance to the extra linework is not available.
2. Tap the open icon on the right-hand side of the *Design* field. The Infield Designs screen opens.
3. Tap Create.
4. Tap Level or Slope to create a simple design; tap Alignment and Section to draw an alignment and section and then combine the two.

TIP - Load extra linework when you view the completed infield design on the work screen.

3.1.1 Level pad design

To create a level pad design, select your guidance focus and then set an elevation.

TIP - Tap Here to use the current Elevation of the focus point.

3.1.2 Slope design

There are four steps to creating a slope:

1. Select the guidance focus and then set the coordinates of the initial point in your alignment.
2. Select the slope type.
   - Point and Direction. Create a slope design by combining an initial point with a defined direction and grade.
   - 2-Point. Create a slope design using two points in the path of your alignment.
3. Define the surface.

   For the Point and Direction method, enter angles for the direction of the path of your alignment and the grade for the mainfall slope of your design in the direction specified.

For the 2-Point method, select the bucket focus and then set the coordinates of a second point, which defines the direction and grade of your alignment.

4. Enter the angle of the cross slope. For a dual cross slope, enter the left and right angles of the slope.

TIPS:

- Tap Here to use the current coordinates of the focus point.
- Tap Level to set the angle(s) of the cross slope to 0%.
- When you change the Slope Type from 2-Point to Point and Direction, the new field values are calculated from the values entered for the two points. Use this to check if the calculated direction and grade are within design limits.

3.1.3 Alignment & Section design

When you create an Alignment & Section, you will be guided through a 3-step process:

1. Create an alignment.
   - Create the points that define the path of the alignment (Plan view).
   - Adjust the elevation of the points to establish the grade of the alignment (Elevation view).
2. Create a section.
3. Combine the section and alignment to create a 3D model of the infield design.

You can create an infield design with your bucket tip directly on screen or using an existing template.

Step 1: Create alignment

Select one of the drawing methods described in the following table.

Icon	Method and description
	Drawing with points. Use points that you have recorded on your work screen or points imported from the office.
	Drawing with the bucket focus. Use the focus of your bucket tip to define alignment points.
	Importing an existing alignment. Use an existing alignment as a template. You can edit it and save it as a new alignment.

Alignment editing modes

The different editing modes described in the table below are common to each of the alignment drawing methods.

By default, the edit coordinate mode is selected. Tap to select the editing mode you prefer.

Icon	Mode and description
	Edit Coordinate. Use this to edit the Northing, Easting and/or Elevation of a point.
	Edit Segment. Use this to edit the distance, internal angle and elevation of a point.

There are two steps to creating an alignment:

1. Create the points that define the path of the alignment (Plan view).
2. Adjust the elevation of the points to establish the grade of the alignment (Elevation view).

TIP - Tap inside any field to directly edit it.

Drawing with points

Plan view

You can use points that you have previously recorded on the work screen or those that have been imported from the office to create a new alignment. Tap to select a point from the Points screen and add it to the alignment.

Use the filters on the Points screen to view only the points that were recorded on the work screen, imported from the office, or both.

Office points are stored in office-created projects. To use any available office points, first select the Office project in Job Setup.

TIP - Use the plan view preview to quickly check the placement of your points in your work area. Points that you have selected are highlighted.

Note – The work area displayed in the plan view preview is the design selected in Job Setup. If you have not selected a design, the plan view preview displays the last selected design.

The cursor identifies the active point. Additional points are relative to the origin point.

Note – Once an origin point has been created it cannot be edited as all the other points created are positioned relative to this point. To change the origin point, tap and create a new one.

Tap to undo your last action. Tap to delete a selected point or double tap individual points to delete them.

Tap the point you want to edit and then, either edit the numeric fields directly, or drag and drop it to a new position.

TIPS:

- Touch and hold the point you want to edit until its color changes to yellow before you try to drag and drop it to its new position.
- Zoom in to place your points more accurately. The resolution of the grid will get finer as you zoom in.

Note – The lock to grid setting will affect the positioning of the point when dragging and dropping.

The icons in the toolbar provide useful tools for creating your design. See Common drawing tools.

Elevation view

After you create the points that define the path of the alignment, tap the Elevation view tab to define the grade of the alignment by adjusting the elevation of the points.

This view shows the elevation of all points along the length of the alignment. By default, the first and last points in the alignment are active . The black dotted line indicates a consistent grade between the two points.

Note – Select any two points on the line by touching them in succession to make them active.

The black dots show the change in elevation between the active points.

Once you select the segments bound by the active points, tap the Align Vertices button to align the segments between the active points. This is useful if you need to apply the same slope or grade to a series of segments.

Note – The Align Vertices button is only available in Elevation view and is only enabled after you create three or more points.

Note – If you alter any of the horizontal positions in the Plan view, you must also check the Elevation view and make adjustments if necessary.

Tap Next when you are finished.

Drawing with the bucket focus

Plan view

You can use your bucket focus to create a new alignment. Tap the Focus icon to select an alternative focus point.

The cursor identifies the active point. Additional points are relative to the origin point.

Note – Once an origin point has been created it cannot be edited as all the other points created are positioned relative to this point. To change the origin point, tap and create a new one.

Each time you move the bucket to the next point, tap the Add Point icon .

Tap to undo your last action. Tap to delete a selected point or double tap individual points to delete them.

After using the bucket focus to create a point, you can edit it.

Tap the point you want to edit and then, either edit the numeric fields directly, or drag and drop it to a new position.

TIPS:

- Touch and hold the point you want to edit until its color changes to yellow before you try to drag and drop it to its new position.
- Zoom in to place your points more accurately. The resolution of the grid will get finer as you zoom in.

Note – The lock to grid setting will affect the positioning of the point when dragging and dropping.

The icons in the toolbar provide useful tools for creating your design. See Common drawing tools.

Elevation view

After you create the points that define the path of the alignment, tap the Elevation view tab to define the grade of the alignment by adjusting the elevation of the points.

This view shows the elevation of all points along the length of the alignment. By default, the first and last points in the alignment are active . The black dotted line indicates a consistent grade between the two points.

Note – Select any two points on the line by touching them in succession to make them active.

The black dots show the change in elevation between the active points.

Once you select the segments bound by the active points, tap the Align Vertices button to align the segments between the active points. This is useful if you need to apply the same slope or grade to a series of segments.

Note – The Align Vertices button is only available in Elevation view and is only enabled after you create three or more points.

Note – If you alter any of the horizontal positions in the Plan view, you must also check the Elevation view and make adjustments if necessary.

Tap Next when you are finished.

Importing an existing alignment

You can use an existing alignment as a template. You can then edit and save it as a new alignment.

Note – Any alignments you create as part of an infield design will be included in the list of available templates.

The cursor identifies the active point. Additional points are relative to the origin point.

Note – Once an origin point has been created it cannot be edited as all the other points created are positioned relative to this point. To change the origin point, tap and create a new one.

Tap the point you want to edit and then, either edit the numeric fields directly, or drag and drop it to a new position.

TIPS:

- Touch and hold the point you want to edit until its color changes to yellow before you try to drag and drop it to its new position.
- Zoom in to place your points more accurately. The resolution of the grid will get finer as you zoom in.

Note – The lock to grid setting will affect the positioning of the point when dragging and dropping.

TIP – To add a new point in the middle of a segment, touch the first point to highlight it and then tap .

Tap to undo your last action. Tap to delete a selected point or double tap individual points to delete them.

The icons in the toolbar provide useful tools for creating your design. See Common drawing tools.

Tap Next when you are finished.

Step 2: Create Section

Sections are like templates that define roads, banks and channels. A section consists of a number segments.

To create a section, use one of the methods described in the following table.

Icon	Method and description
	Drawing directly on-screen with your finger. Use your finger directly on the screen to define section points.

Icon	Method and description
	Drawing with the bucket focus. Use the bucket focus to define section points.
	Importing an existing section. Use an existing section memory as a template. You can edit it and save it as a new section memory.

Section editing modes

The different editing modes described in the table below are common to each of the section creation modes.

By default, the edit line mode is selected. Tap to select the editing mode you prefer.

Icon	Mode and description
•	Edit Point. In edit point mode you use relative measurements to specify a point's position (like rise over run).
	Edit Line. In edit line mode you use an angle and a horizontal distance from the previous point to specify a point's position.
	Scale All. In scale all mode you use a width and a height to specify the sections size. *Note – In scale all mode, indicates that the height and width ratio will be maintained on scaling. Tap to adjust these measures independently of each other ( ).*

TIP - Tap inside any field to directly edit it.

Drawing directly on-screen with your finger

You can draw points directly on the screen with your finger to create a new section and then save it.

The cursor identifies the active point. Additional points are relative to the origin point.

Every time you lift your finger off the screen a new point is added.

Tap the point you want to edit and then, either edit the numeric fields directly, or drag and drop it to a new position.

Tap to undo your last action. Tap to delete a selected point or double tap individual points to delete them.

The icons in the toolbar provide useful tools for creating your design. See Common drawing tools.

Tap Next when you are finished.

Drawing with the bucket focus

You can use your bucket focus to create a new section. Tap the Focus icon to select an alternative focus point.

Each time you move the bucket to the next point, tap the Add Point icon .

Tap the point you want to edit and then, either edit the numeric fields directly, or drag and drop it to a new position.

After using the bucket focus to create a point, you can edit it.

Tap the point you want to edit and then, either edit the numeric fields directly, or drag and drop it to a new position.

TIPS:

- Touch and hold the point you want to edit until its color changes to yellow before you try to drag and drop it to its new position.
- Zoom in to place your points more accurately. The resolution of the grid will get finer as you zoom in.

Note – The lock to grid setting will affect the positioning of the point when dragging and dropping.

The icons in the toolbar provide useful tools for creating your design. See Common drawing tools.

Tap Next when you are finished.

Importing an existing section

You can use an existing section as a template. You can then edit and save it as a new section.

The cursor identifies the active point. Additional points are relative to the origin point.

Note – Once an origin point has been created it cannot be edited as all the other points created are positioned relative to this point. To change the origin point, tap and create a new one.

Tap the point you want to edit and then, either edit the numeric fields directly, or drag and drop it to a new position.

TIPS:

- Touch and hold the point you want to edit until its color changes to yellow before you try to drag and drop it to its new position.
- Zoom in to place your points more accurately. The resolution of the grid will get finer as you zoom in.

Note – The lock to grid setting will affect the positioning of the point when dragging and dropping.

Tap to undo your last action. Tap to delete a selected point or double tap individual points to delete them.

The icons in the toolbar provide useful tools for creating your design. See Common drawing tools.

Tap Next when you are finished.

Step 3: Combine Alignment and Section

In this final step, the section is attached to the alignment. By default, the first point of the section acts like an anchor and is attached to the alignment.

Drawing tools

The icons on the drawing screen provide useful tools to assist with combining the alignment and section.

Icon	Description
	Enter the distance to extend the design back from the first point defined in the alignment. The maximum value is 500 m.
	Enter the distance to extend the design beyond the last point defined in the alignment. The maximum value is 500 m.
	Tap to move the intersection of the section and alignment to the previous point.
	Tap to move the intersection of the section and alignment to the next point.
	Tap to horizontally flip the section without changing the intersection of the section and alignment. Use this feature if the section is attached to the wrong side of the alignment and you need to flip it to the other side. For example, if the section is attached to the left side of the alignment and needs to be on the right side, or vice-versa.
	Tap to reset the zoom and display the entire drawing in the view.

Plan view

To edit the intersection point of the section, tap the Next Point and/or Previous Point icons. The axes hairs show you where the section and alignment intersect.

3D view

Use the 3D view to perform a sanity check on the design.

TIP - Zoom in to inspect the design closely.

The system automatically assigns the next available name to the design, for example: "Infield 2". If required, tap inside the *Name* field and enter another name.

Tap Apply.

Common drawing tools

The icons on the drawing screen provide useful tools to assist you with drawing alignments or sections.

Icon	Description
	Tap to undo the last action.
	Mirror the existing section either from the origin point or from the end point. Select the mirroring direction in the pop-over box. Select to replicate and reflect the section and attach it to the end. Select to replicate and reflect the section and attach it to the origin. *Note – This is not available for Step 1: Create Alignment.*
	Tap to reset the zoom and display the entire drawing in the view.
	Lock to Grid. New points are placed on the nearest intersection on the drawing grid. Unlock from Grid. New points are placed anywhere in the drawing window. Tap to switch between the modes. *Note – Lock to Grid only applies to points created or edited on-screen by touch.*

Tips to avoid overlapping surfaces in infield designs

Using the Alignment and Section method to create infield designs can create designs with overlapping surfaces. The system may fail to give guidance to overlapping surfaces.

To use the Alignment and Section method to create designs with no overlapping surfaces, create alignments that:

- Are straight or with wide corners and curves.
- Start and end on straight portions - if the design must close on itself. Leave a small gap between the alignment's start and end.
- Have shallow or smooth elevation changes.
- Are along the inside edges of the desired surfaces so that placing the sections creates surfaces along the open sides of the alignments.
- Have narrow cross sections, especially on designs with corners or curves.

When you combine the alignment and section, use the 3D view to check for:

- Overlapping sections - dark gray
- Missing sections - no gray
- Poorly formed sections - possible poor guidance points

4

Using Design Guidance

In this chapter:

- Using Design Mode
- Using Elevation Offsets
- Horizontal Guidance
- Vertical Guidance
- Working with Points
- Measured Data
- 3D Line Guidance
- Lane Guidance
- Using GNSS

To generate guidance information, the system measures the cutting edge's position relative to a three dimensional (3D) digital map of the design surface. This is called Design guidance. 3D sensors such as GNSS receivers allow the system to always know the machine's three dimensional location.

4.1 Using Design Mode

Design mode lets you select and load a design surface to get guidance to.

Designs may include one or more surfaces and optional line work. You can select a line and get guidance to it from the attachment focus tip.

Use .dsz and .vcl design files that are created in the office in Business Center Heavy Construction Edition.

When you select a .vcl design file that contains multiple surfaces, you must further select an individual surface from the file and a master alignment for that surface.

The system supports filled linework in .vcl files. The fill reflects the color set in Business Center Heavy Construction Edition.

4.1.1 Selecting Design mode

1. From the Dashboard, tap the Machine Setup tile.
2. From the Machine Setup screen, select the 3D positioning source that you require and tap Apply.

   Note – The positioning source you select will determine the modes that you can select from the Job Setup screen.
3. From the Dashboard, tap the Job Setup tile.
4. From the Job Setup screen select Design as the mode. Also select a project, and design file along with a surface and master alignment (if available).
5. To add reference surfaces, tap to open Surfaces Manager. Tap Apply.
6. From the Dashboard, tap Start. The work screen appears.

Note – If you select extra linework in Infield mode or Depth and Slope mode, and then change to Design mode, the linework's design will be the default design.

4.1.2 The work screen

In Design mode, this icon (and the name of the selected design) appears at the top left-hand side of the work screen:

Touch and hold the icon to open the Job Setup screen.

The Design offset icons

The offset icons always appear in the same order left to right on the guidance bar, as shown below:

Horizontal offset	Vertical elevation offset	Perpendicular elevation offset

Note – Either the vertical elevation offset or *perpendicular elevation offset icon appears, depending on which offset type is in use.*

Use the offset icons in the following ways:

- Tap to cycle through the configured offset memories.
- Touch and hold to access the respective offset configuration screens.

The offset settings screens

- Use the horizontal offset screen to select a line and configure an offset value.
- Use the elevation offset screen to configure a vertical or perpendicular offset.

Note – If you switch from Design mode to Depth and Slope mode, the system reverts back to an Elevation Offset of 0.00.

4.1.3 Overlays

The overlays icon is in the top right-hand corner of the guidance bar:

Use this icon to directly access the Overlays screen, which controls what appears on the guidance view.

The guidance view

The guidance view displays the machine relative to the surface being worked. You can set up to three different views to display at once, from the following view types:

- 3D
  Note – The 3D view only renders the design surface for a radius of 300 m (about 1000 feet) from the current machine position.
- Cross-section
- Profile
- Plan
- Bubble
- Cut/Fill Focus
- Cut/Fill Left

- Cut/Fill Right
- Cut/Fill Center
- Cut/Fill Center Back

Text items

Use the text ribbon (across the bottom of the guidance view) to display text items of your choice. By default, the system displays ribbon items appropriate for your machine. Useful text items for Design mode are:

- Cut/Fill Left
- Cut/Fill Right
- Offline

Touch and hold any text item in the text ribbon to open the corresponding context menu:

- Tap Add to select a new text item to add to the text ribbon.
- Tap Replace to select another text item to replace the current one.
- Tap Remove to remove the current text item from the text ribbon.

At the bottom of the context menu, you can tap Go to Text Ribbon . Alternatively you can access it from the System Settings menu . The Text Ribbon screen allows you to:

- Drag-and-drop items to reorder your list. Alternatively, you can drag a text item in the text ribbon to shuffle it.
- Tap Edit to select which items appear.
- Tap Default to reload the default ribbon items for your machine.
- Enable or disable the display of the text ribbon in the work screen.

4.1.4 System settings

The System Settings icon is on the work screen:

Use System Settings to access and configure various functions, including (but not limited to):

- Lightbars
- Units
- File Transfer
- Increments (where the inc/dec switches step size can be set)

The shortcut bar

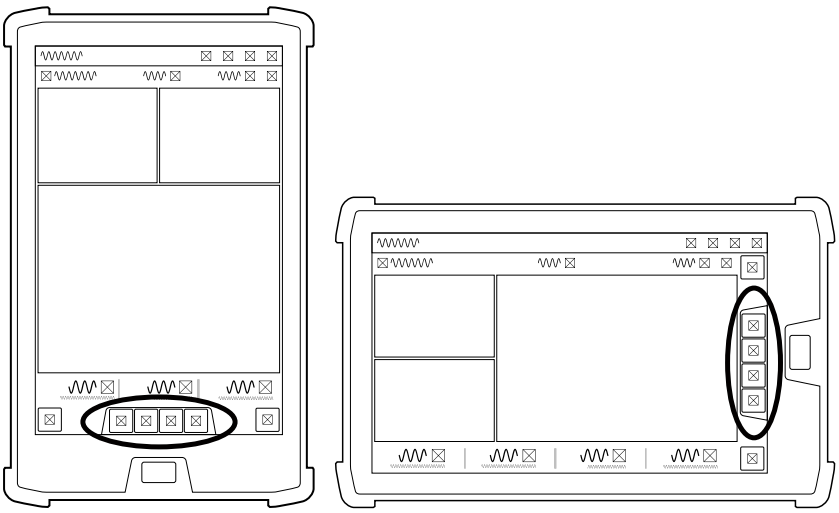

The shortcut bar enables you to easily perform frequently repeated tasks. The shortcut icons are for Design relevant items such as Record Point and Attachment Focus.

4.1.5 The Back icon

The Back icon is in the top left-hand side of the title bar:

You can tap the icon or title to return to the previous screen; either the Dashboard or work screen.

Work settings

The Work Settings icon is in the lower right-hand side of the work screen:

Use the Work Settings menu to access and configure those settings that change according to the requirements of each individual task, including (but not limited to):

- Attachments
- Elevation Offset
- Record Point

4.2 Using Elevation Offsets

Often, it is not possible to reach the design surface in a single pass, because the elevation of the current ground is too far away from the design surface.

The system lets you apply elevation offsets to the design to create target surfaces that are achievable in a single pass.

You can also use a working surface offset to shift the design surface to a known distance above or below the design surface, for example a subgrade at a known distance below the finished level design.

When using a working surface offset, elevation offsets are applied away from the working surface so you can work the offset down to zero over several passes to reach subgrade for example.

4.2.1 Accessing the Elevation Offset screen

Perform one of the following actions to access the Elevation Offset screen:

- Open the Work Settings menu .
- Touch and hold the elevation offset field in the guidance bar.

The appearance of the offset icons on the guidance bar depends on:

- The direction of the working surface offset
- The direction of the elevation offset
- The type of offset – vertical or perpendicular

Working Surface Offset	Elevation Offset	Vertical	Perpendicular
Negative	Negative		
	Zero		
	Positive		
Zero	Negative		
	Zero		
	Positive		
Positive	Negative		
	Zero		
	Positive		

4.2.2 The Elevation Offset screen

Use the Elevation Offset screen to:

- Apply or edit an elevation offset
- Select or edit an existing Elevation Offset memory
- Apply or edit a Working Surface offset

You can also access the Offset Memories screen, which you can use to create elevation offset values that the system saves and can be selected for later use.

When you work in Design mode, you can use elevation offsets to do the following tasks:

- Add an offset to the design surface.
- Select an offset from the offset memories.
- Apply a new working surface that is a offset above or below the design surface that you want to achieve at the end of the current task (this is done under Advanced Options).

  For example, create a working surface that is 300 mm (1 ft) below the design and bulk shift to that working surface. Then, add material back in offset increments of 50 mm (2 in) each to build back up to the design surface.
- Choose the offset direction (vertical or perpendicular) that applies to both the elevation offset and any working surface offset.

4.2.3 Applying an elevation offset

Use either of the following methods:

- Access the Elevation Offset screen, enter the following data and then tap Apply:
  - Offset value
  - Focus for guidance
  - Offset direction (optional item under Advanced Options):
    - Vertical - typically for a known elevation
    - Perpendicular - typically for a known thickness, particularly on a sloping surface
- Open the work screen and tap the elevation offset field in the guidance bar to cycle through the saved offset memories.
- Use the increment/decrement elevation offset switch to increase or decrease the offset. (To edit the increment values, go to System Settings > Increments.)

4.2.4 Creating, editing or deleting memories

In the Elevation Offset screen:

- Tap the Save button to save an entered offset value as a memory.
- Tap the Memories icon on the right-hand side of the memory to open the Offset Memories screen.

In the Offset Memories screen:

- Tap the overflow icon to edit or delete a memory.
- Tap the Create button to create a new memory.
- Touch and hold on a memory to select multiple memories for deletion.

Note – The Save button saves the offset value only. The Working Surface offset and offset direction are not saved.

4.3 Horizontal Guidance

You can receive horizontal guidance relative to the following design features:

- Lines within Office Designs or Infield Designs
- Design surface boundaries

Setting a horizontal offset moves the horizontal guidance away from the selected line. You add or subtract an offset square to the selected horizontal line.

4.3.1 Access the Horizontal Guidance screen

Perform one of the following actions to access the Horizontal Guidance screen:

- Open the Work Settings menu .
- Touch and hold the horizontal offset field in the guidance bar.

The horizontal offset icon on the guidance bar appears differently according to the value of the current horizontal offset:

Offset type	Icon	Offset value
Negative		Negative/left of line
None		Zero
Positive		Positive/right of line

TIP – The arrows on the selected line indicate the direction of the line. A positive offset is to the right-hand side of the selected line, relative to the direction of the line. A negative offset is to the left-hand side of the selected line, relative to the direction of the line when you look along the line in the direction of the arrows.

4.3.2 The Horizontal Guidance screen

Use the Horizontal Guidance screen to:

- Select a horizontal line to guide to
- Optionally apply an offset

Select a line for horizontal guidance

1. Access the Horizontal Guidance screen.
2. If you have not already done so, select a line to guide to. Either select a line from the drop-down list or tap a line on the plan view.
3. Tap Apply.

In the Horizontal Guidance screen, the plan view draws the selected line in red. Arrows indicate the direction of the line.

Alternatively, you can also select a line for horizontal guidance from the context menu in the work screen:

1. From the plan view guidance pane, press and hold anywhere near the line you want to select. A context menu appears.
2. Tap Choose Line and select an available line.
3. Tap Use for guidance.

Note – If you selected a design in the Job Setup menu that contains 3D lines, from the work screen use the shortcut key or Work Settings menu to open the 3D Line Guidance screen and select a 3D line for guidance.

Apply a horizontal offset

The horizontal offset is the offset distance left (–) or right (+) of the selected line.

1. Access the Horizontal Guidance screen.
2. Optionally, select a line to guide to.
3. Optionally, enter the value of the offset or tap the ▲ or ▼ buttons to increase or decrease the value.
4. To save this as a memory, tap Save.
5. Tap Apply.

When an offset is entered (other than zero), in the Horizontal Guidance screen, the plan view draws the original selected line in cyan. Arrows indicate the direction of the line. A positive offset is to the right-hand side of the selected line, relative to the direction of the line. A negative offset is to the left-hand side of the selected line, relative to the direction of the line when you look along the line in the direction of the arrows.

The guidance line is drawn in red, it is offset from the selected line by the offset value and is the line guidance is provided to.

Tap Memories to select an existing horizontal offset memory or to create the new offset memory values that the system saves for later use.

Applying a horizontal increment

1. Access the Increments screen from the System Settings menu .
2. Optionally, enter the value of the increment in the Horizontal Distance field.
3. Tap Apply.

The horizontal increment value is the amount the horizontal offset changes each time the ▲ or ▼ buttons are tapped in the Horizontal Guidance screen.

4.3.3 Horizontal position information

The center lightbar can provide offline guidance (left/right) and the right lightbar can provide reach (in/out) guidance. For more information, refer to the *On-screen Lightbars* guide or the *External Lightbars* guide.

In addition to the lightbar, the following text items are also useful:

- Guidance Line: Shows the named line of the line selected for horizontal guidance (if named).

4.3.4 Creating, editing or deleting memories

In the Horizontal Guidance screen:

- Tap the Save button to save an entered offset value as a memory.
- Tap the Memories button to open the Horizontal Offset Memories screen.

In the Horizontal Offset Memories screen:

- Tap the overflow icon ⋮ to edit or delete a memory.
- Tap the Create button to create a new memory.
- Touch and hold on a memory to select multiple memories for deletion.

4.4 Vertical Guidance

The system calculates the amount of cut/fill between the attachment tips and the design surface (or an extension of it) and displays that in the text items and lightbars to guide the operator to build the design surface.

The vertical guidance option selected in the Attachments screen changes how the system looks at and extends the design surface beneath the blade to calculate the cut / fill values, so it is important that the correct selection is made for the task you are performing.

This guide will help you understand how the different vertical guidance options work and why you should choose them so that you can determine when you change the selection.

Overcut Protection is also available.

4.4.1 Access the Attachments screen

Perform one of the following actions to access the Attachments screen:

- Open the Machine Setup tile on the Dashboard and then tap the Attachments button.
- Open the Work Settings menu and tap Attachment Manager.
- Touch and hold the Focus shortcut icon on the shortcut bar.

4.4.2 The Attachments screen

Use the Attachments screen to:

- Select a focus, or a side of the attachment, to guide to. For more information on using the guidance focus, see 4.3 Horizontal Guidance.
- Select a Vertical Guidance
- Optionally apply a Custom Inset
- Optionally toggle Overcut Protection on
- Edit cutting edge length
- Change the current bolt hole selection

Select an option for Vertical Guidance

1. Access the Attachments screen.
2. Select Guidance Focus. For more information on using the guidance focus, see 4.3 Horizontal Guidance.
3. Select the Vertical Guidance option for the current task:
   - Right - a single vertical guidance point inset 0.200 m (7.9 inches) from the right cutting edge tip. Use this option when you are using the right side of the cutting edge to build a design that is less than half your blade width, such as a narrow ditch.

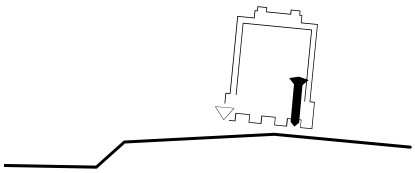

   - Center - a single guidance point in the cutting edge center. Use this option when you need to grade material over a change in grade, such as the crown or shoulder of a road. You can extend up to half the blade over the change in grade.

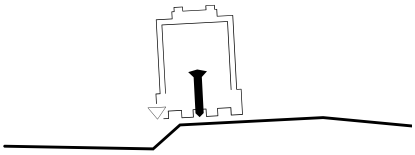

- Left - a single vertical guidance point inset 0.200 m (7.9 inches) from the left cutting edge tip. Use this option when you are using the left side of the cutting edge to build a design that is less than half your cutting edge width, such as a narrow ditch.

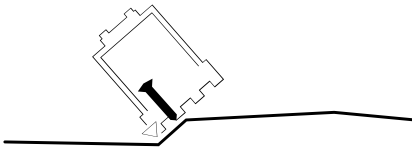

- Linked to focus - a single guidance point inset 0.200 m (7.9 inches) from the cutting edge tip with focus. Use this option when you are building a design that is less than half your cutting edge width, such as grading a narrow ditch from both directions. This guidance point is linked to the Focus and changes when the Focus changes.
- 2 Points - two vertical guidance points, each inset 0.200 m (7.9 inches) from the cutting edge tip. Use this option when you need to average the grade over the cutting edge width, such as when grading a design with smooth curves, like a golf course.

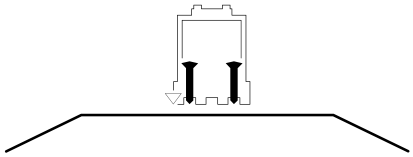

4. Tap Select.

Design line preview

The system can show an indication of the current design line in the cross section view. This enables you to identify how the cut/fills are being calculated based on the currently-selected vertical guidance point (or points) and the Overcut Protection setting:

1. Access the Overlays screen.
2. Enable the Design Line Preview (Cross Section) toggle. The design line displays on the cross section view as a dashed line.

Apply a custom inset

A custom inset allows you to change the position of the vertical guidance points by entering a custom offset distance from the cutting edge tips.

Note – The custom inset option is available only when using Linked to Focus and 2 Points Vertical Guidance options.

To apply a custom inset:

1. Select either Linked to Focus or 2 Points from the Vertical Guidance menu.
2. Open Advanced Options and toggle Custom Inset on.
3. Optionally update values in one or both of the inset fields. The insets swap sides when the Focus changes.
4. Optionally, toggle Overcut Protection on.
5. Tap Select.

4.4.3 Overcut Protection

If Overcut Protection is on, the system checks for overcut of the design surface and adjusts the cut/fill guidance to prevent it.

The Overcut Protection check depends on the selected Vertical Guidance:

- When vertical guidance other than 2 Points is selected, the entire length of the cutting edge is checked against the design surface.
- When 2 Points vertical guidance is selected, only the tips of the cutting edge are checked against the design surface.

Overcut Protection is useful when moving material across the toe of a slope, for example moving excess material down from the batter to the floor of the excavation. Toggle Overcut Protection off when the task is done to receive accurate guidance on the rest of the job.

When Overcut Protection is enabled the surface adjusts to protect the toe of the slope.

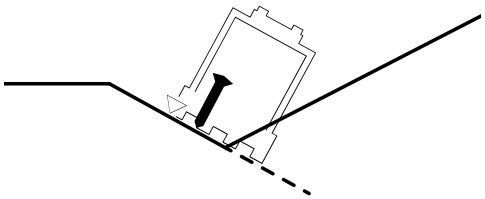

Overcut protection off

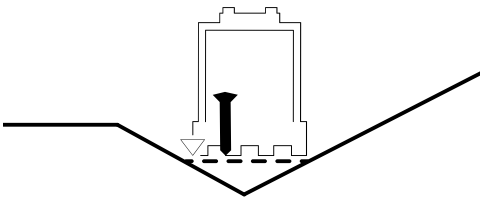

Overcut protection on

4.4.4 Edit the cutting edge length

For information on editing the cutting edge length, update the value in the Edit Attachment screen, accessed via the Edit button on the Attachments screen.

4.4.5 Troubleshooting

If you are using 1 Point vertical guidance with Overcut Protection on and the cutting edge cuts into the design surface, move the attachment so the vertical guidance point is farther away from sharp grade changes.

4.5 Working with Points

Points are available when you are in Design mode and the machine has 3D sensors. If you use GNSS receivers, the machine must be within the GNSS Tolerance Precision.

You can create points in the office or in the field.

4.5.1 Displaying points

To control the appearance of infield points on the work screen, adjust the settings in the Overlays screen. To open the Overlays screen, tap in the top right-hand corner of the guidance bar. The Points drop-down on the Overlays screen enables you to hide on-screen points, or show combinations of the icon, *Name* and *Code* field.

If you choose to show points with their *Name* and *Code*, the system may truncate the onscreen text so the important parts of the name fit on the screen.

Office points that are included in a layer in a .vcl file are managed the same way as linework within the layer. When you use the Layers Manager screen to:

- Show the layer, the points also display.
- Hide the layer, the points are also hidden. Infield points remain visible.

4.5.2 Filtering points

On the Points Manager screen, you can filter to limit which points appear in the list. You can show:

- All points
- Only points created in the office
- Only points created in the field (all Measured Data stores)
- Only points contained in a specific Measured Data store

4.5.3 Deleting a point

In the Operator App, you can only delete a point that was created in the field. A point created in the office must be deleted from the office software.

When you delete a point created in the field, the system preserves the point so the data is still available to the office. The point is moved from the Measured Data file to a file named *<Measured_Data_name>.<machine_name>.deleted*.

To delete a point:

- From the Points Manager screen, tap the overflow icon ⋮ on the right-hand side of the point and select Delete.
- On the work screen:
  a. Press and hold the point name. The pop-up menu displays.
  b. Tap > and then tap Delete.

4.5.4 Recording a point

Use Record Point to save the 3D position (Northing, Easting and Elevation) of a point. It is useful for recording positions that are hard to reach, for example under water, or points of interest on site, such as the location of a manhole.

Your machine does not have to be stationary to record a point. Whether your machine is moving or stationary, the system records the current position of the focus point *when*:

- you enter the Record Point screen
- you use the Record Point shortcut key

You can access the Record Point screen from the Work Settings menu . The Record Point screen lets you set up how the system logs the points that you record. It allows you to set specific identifiers for the points, as required for the current job and environment. There are three types of identifiers for points: name, code, and Measured Data.

The Edit Point screen has the same fields as the Record Point screen. It enables you to modify an existing point.

Name

In the Record Point screen, tap in the *Name* field to enter a name for the point.

If a point in the system already has this name (for example Manhole) the system alerts you with a message and adds a numeric suffix to the new point (for example Manhole 3). The suffix automatically increases with each new point that has the same name. This lets you quickly and repeatedly record points via the shortcut key or record point switch without having to enter anything into the Record Point screen.

If you do not enter anything into the *Name* field the name is just the numeric suffix. If you do not specify a suffix, the system generates one automatically. You can edit the name and the suffix as required.

Use this icon ▪▪▪ (next to the *Name* field) to select from a list of previously used names.

Code

The *Code* field is a string of text that helps describe the point, for example Mainfall 1. In the Record Point screen, you can manually enter a *Code* string when you record the point, or you can use this icon ▪▪▪ to select a string that was predefined in the office software. The predefined *Code* strings are exported from the office software in a .flx file.

If you do not enter anything into the *Code* field, the code will be undefined.

Measured Data

See Measured Data.

Northing, Easting, and Elevation

If the Northing, Easting, and Elevation coordinates are available at the time you access the Record Point screen, they will appear. The coordinates do not change if you move the focus point. You can use the on-screen keypad to enter or change coordinates if required.

The Always Prompt toggle

If Always Prompt is on, the Record Point screen appears each time you tap the Record Point icon in the work screen. Do this if you want to change the point name, code, or Measured Data for each point you record.

If you want to record a number of points with the same name, code, and Measured Data, set the Always Prompt toggle to off.

Cancel

To discard your changes, tap Cancel. The screen closes and the work screen appears.

Save

To record the new point, tap Save. The screen closes and the work screen appears.

4.5.5 How to record a point

1. Place the focus point onto the point that you want to record.

2. To record the point, do one of the following:

- Access the Record Point screen, enter a name and code, tap Here and then Save.
  - Touch and hold the Record Point icon in the shortcuts bar ; this opens the Record Point screen. Enter a name and code, tap Here and then Save.
  - Record a point that inherits the last used name (the system adds a numeric suffix to the new point):
    - Tap the Record Point icon , or
    - Press the Record Point button on your remote switch:

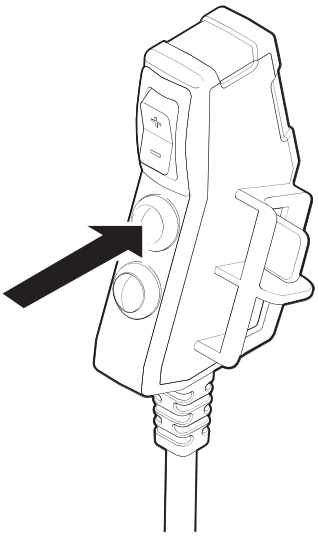

4.5.6 Point files

Infield points are stored in a .pnt file. There is a separate .pnt file for each Measured Data, using the naming convention *<measured data>.<machine name>.V01.pnt*.

4.5.7 Navigating to a point

The system can provide navigation to an infield or office point. On the Points Manager screen, tap the overflow menu icon beside the appropriate point and select Navigate To Point.

When the system provides guidance to a point, the work screen border turns blue and shows a blue line between the focus and the point. The text ribbon shows:

- Nav Direction: the direction to the point relative to the machine direction
- Nav Distance: the horizontal distance to the point
- Nav Depth: the vertical distance to the point

Press this icon to stop navigation.

4.5.8 Troubleshooting

If the record point icon does not appear in the shortcuts bar, and the Record Point option is not in the Work Settings menu, check that you are in Design mode and that your system includes a 3D sensor.

4.6 Measured Data

Measured Data are containers for points. They enable you to group related points together so you can sort through many points. For example, you might use a Measured Data to group together all points created on a specific day. You can then set filtering to display only the points in that Measured Data.

Measured Data are created in the field.

4.6.1 Creating a Measured Data

You can access the Measured Data screen from the Work Settings menu .

1. From the Measured Data screen, tap Create. The New Measured Data screen appears.
2. Enter a name for the Measured Data and then tap Save. The new Measured Data appears in the list.

Measured Data naming conventions

Measured Data names can be up to 90 characters long.

Avoid using the following in Measured Data names:

- , : * | \ / ?
- Emojis
- Duplicate names

4.6.2 Deleting a Measured Data

You can only delete a Measured Data created in the field. When you delete the Measured Data, the system preserves the points that are contained within it so the office still has access to the data.

You can access the Measured Data screen from the Work Settings menu .

1. On the Measured Data screen, select the Measured Data to delete.
2. Tap the overflow icon and select Delete. A confirmation dialog appears.
3. Tap Yes to confirm the deletion.

4.6.3 Changing the Measured Data of a point

When you create a point, it is assigned to a Measured Data. You can access the Points Manager screen from the Work Settings menu .

To move a point from one Measured Data to another:

1. On the Points Manager screen, select the point.
2. Tap the overflow icon on the right-hand side of the point and select Edit. The Edit Point screen appears.
3. Select the new Measured Data from the Measured Data drop-down list.
4. Tap Save to save the point and return to the Points Manager screen.

4.7 3D Line Guidance

3D line designs (.dsz files) contain one or more 3D lines, that represent features such as paths, drains, pipelines and avoidance zones (if available in the Project).

You can do the following with a 3D line design:

- Vary the width of the design surface of a selected 3D line.
- Extend the length of a selected 3D line. This also extends the design surface defined by it.

The cross slope of the design surface defined by a 3D line is always level.

The direction and grade of the design surface defined by a 3D line can change between segments.

A 3D line has named start and end points. The start point is named A and the end point is named B.

4.7.1 Loading a 3D lines file

You need to load a 3D lines file before you can enable 3D line guidance. You can do this from the:

- Dashboard, or;
- Work screen

Dashboard

1. On the Dashboard, tap the Job Setup tile. The Job Setup screen appears.
2. From the Project drop-down, select a project that contains a 3D lines design.
3. From the Modes drop-down, select the Design mode.
4. From the Design drop-down, select a 3D lines file. The image on the left changes to show that the selected file is a 3D lines file.

5. Tap Apply. The Dashboard appears.
6. Tap Start. The work screen appears.
7. Use the shortcut key or Work Settings menu to open the 3D Line Guidance screen and select a 3D line for guidance.

Work screen

You can access a 3D lines file from either the:

- Guidance bar, or;
- Work Settings menu

Guidance bar

1. On the guidance bar, touch and hold the current file name. The Job Setup screen appears.
2. From the Project drop-down, select a project that contains a 3D lines design.
3. From the Modes drop-down, select the Design mode.
4. From the Design drop-down, select a 3D lines file. The image on the left changes to show that the selected file is a 3D lines file.
5. Tap Apply. The work screen appears.
6. Use the shortcut key or Work Settings menu to open the 3D Line Guidance screen and enable 3D line guidance.

Work Settings menu

1. Tap the Work Settings icon .
2. Tap the Job Setup menu item. The Job Setup screen appears.
3. From the Project drop-down, select a project that contains a 3D lines design.
4. From the Modes drop-down, select the Design mode.
5. From the Design drop-down, select a 3D lines file. The image on the left changes to show that the selected file is a 3D lines file.
6. Tap Apply. The work screen appears.
7. Use the shortcut key or Work Settings menu to open the 3D Line Guidance screen and enable 3D line guidance.

4.7.2 Accessing the 3D Line Guidance screen

To access the 3D Line Guidance screen (from the work screen) you can either:

- Tap the shortcut key , or;
- Go to the Work Settings menu > 3D Line Guidance.

Note – The shortcut key does not appear in the work screen until you load a 3D lines file.

4.7.3 Selecting a 3D line for guidance

1. Access the 3D Line Guidance screen.
2. In the plan view, select the line that you want to work with. You can pan and zoom the plan view as required.
3. Set the surface width. The value must be between 0.10 of a meter and 50.00 meters (4 inches and 164 feet).
4. To extend the length of the line, expand Advanced Options and enter the end point extension lengths. The maximum length that you can add is 100 meters (328 feet).
5. Tap Apply. The work screen appears with the selected line shown in red. Any end point extensions appear as a dashed red line, and the guidance surface that is generated appears in dark gray.

4.7.4 Changing 3D line guidance

To change the line that you want to get 3D line guidance to:

1. Access the 3D Line Guidance screen.
2. The currently selected line appears in the plan view. Select the 3D line you want to get guidance to.
3. Set the Surface Width.
4. If required, expand Advanced Options and enter the end point lengths.
5. Tap Apply. The work screen appears with the line shown as a surface.

4.7.5 Lightbar guidance to a 3D line

You can use the vertical guidance and horizontal guidance lightbars to guide you to your chosen 3D line.

4.7.6 Useful text items

- Cut/Fill Left
- Cut/Fill Center
- Cut/Fill Right
- MA Offset (you can use this to gauge how far you are from your chosen 3D line).

4.8 Lane Guidance

Lane guidance enables you to work in two different ways:

- Holding an attachment onto a surface or lane
- Extending a lane sideways

Lane guidance is available when:

- You are in design mode
- You have a .dsz design loaded
- A master alignment is present

Working surface, vertical and perpendicular lifts and horizontal guidance all work with lane guidance.

Note – When you show cut/fill mapping while using lane guidance, you see a subset of the entire mapped ground surface. This is most noticeable when using lane guidance on a horizontal curve. Toggle lane guidance off to display the ground surface mapping over the complete design reference.

4.8.1 Holding your attachment onto a surface or lane

When working on narrow surfaces such as a v-ditch, you can use lane guidance to extend the slope of the v-ditch so that you can build that slope with an attachment that is wider that the v-ditch. The system only gives guidance to your chosen lane.

4.8.2 Extending a lane sideways

Lane guidance lets you select a lane or two lines and extend the surface of the lane or the grade between the two lines out to the left and right, to suit different situations.

For example, you can select a lane for guidance and extend it to the side to either meet the cut or fill batter or sideslope of the road. This is often also offset in height as well so that the design is built up in layers. See the figure below:

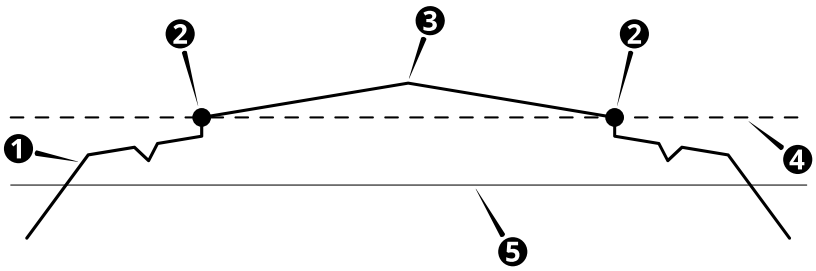

❶	Original design	❷	Lane side	❸	Master alignment
❹	Lane surface	❺	Lane surface for guidance (offset by 1 meter)		

You can also use lane guidance to suit a particular stage in a project. For example, while building the cross slope of the left-hand lane, the lane is extended over the crown so that excess material is cast over the crown onto the right-hand lane. The material in the right-hand lane is dealt with at a later time. See the figure below:

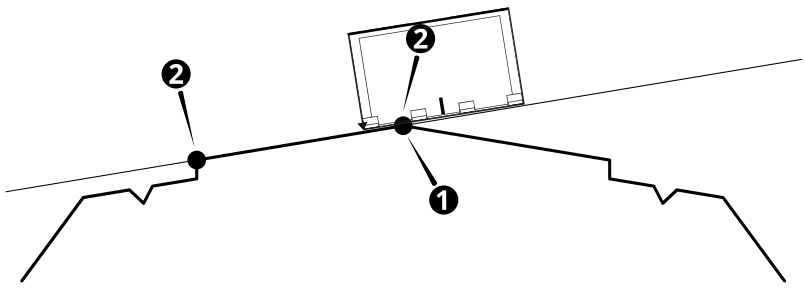

❶ Master alignment ❷ Lane side

4.8.3 The shortcut key

When you are in the work screen, you can use the shortcut key to select a lane:

1. Position the machine with the attachment focus point between the required lane sides.
2. Position the machine with the screed focus point between the required lane sides.
3. Tap .

You can also touch and hold the shortcut key to open the Lane Guidance screen.

If your design does not have a master alignment, and you try to enable Lane Guidance via the shortcut key, the Select Master Alignment screen appears. In the plan view, tap the line that you want to use or select a named alignment from the drop-down list. Once you have selected a master alignment, the work screen appears.

4.8.4 The Lane Guidance screen

To open the Lane Guidance screen:

- Touch and hold the shortcut key , or;
- Go to the Work Settings menu > Lane Guidance.

The Lane Guidance screen contains a plan view of the machine on a design. You can pan and zoom this view as required.

If the .dsz file contains named lines, you can select them from the Line A and Line B drop-down lists.

The master alignment

The lane surface is calculated at right angles to the master alignment.

If the .dsz file contains a master alignment, it appears in the plan view as a solid blue line. You must use this master alignment and cannot change it.

If the .dsz file does not contain a master alignment, you must select one before you select the lane sides:

1. Touch and hold . The Select Master Alignment screen appears.
2. In the plan view, tap the alignment that you want to use as the master alignment. Or, select an alignment from the drop-down list.

   The master alignment is stored with the design indefinitely. If the design is unloaded and reloaded then the last selected master alignment is used.

   Note – Think of the two lane sides and master alignment as a group. If you change the master alignment, but not the lane sides, this changes the lane surface and the guidance to it.

You can use the master alignment itself as one of the sides of the lane.

Creating a lane surface

To create a lane surface from the Lane Guidance screen, do one of the following:

- Select the alignments from the drop-down lists.
- Tap each lane side on the plan view.
- Touch and hold the area between two lane sides.

4.8.5 Lane Guidance limits

- The lane must be a minimum of 300mm (12in) wide.
- The lane sides must not turn more than 90° away from the master alignment.
- Lane Guidance starts only when all three lines (the master alignment, left-hand lane side and right-hand lane side) have started. See the figure below:

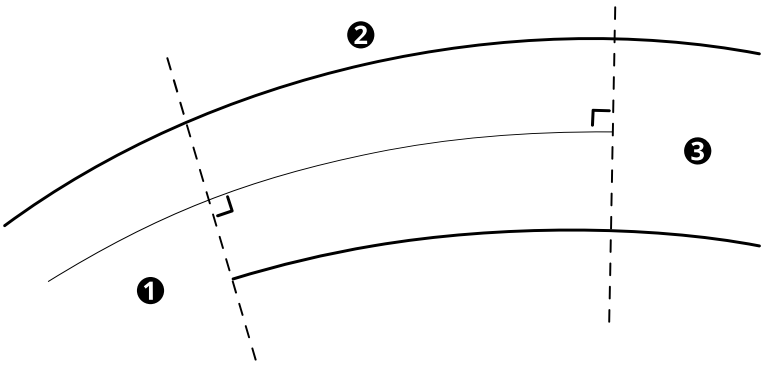

❶ Lane guidance unavailable: only one lane side is present	❷ Lane guidance available: two lane sides and the master alignment are present	❸ Lane guidance unavailable: no master alignment present

4.8.6 Troubleshooting

Lane guidance is unavailable when:

- You are more than 100 meters extension (left/right) of the guidance lane sides.
- Either lane side does not lie above the design surface.

4.9 Using GNSS

4.9.1 Troubleshooting

The table below lists some of the error messages that may appear in the work screen and common error states during operation.

Operational State	Problem	Solution
Coordinate System Failed To Load. Unable to load the coordinate system for the current project.	One or more of the coordinate system files, or the site calibration file, may be corrupt.	Contact your technician, site engineer, or surveyor.
Coordinate System Failed To Load. <filename>not specified in coordinate system database XML.	A file that is referenced in the project site calibration is not included in the coordinate system database. The coordinate system database may need to be updated to include the required file.	Contact your technician, site engineer, or surveyor.
Coordinate System Failed To Load. <filename> is missing or invalid.	A file that is referenced in the project site calibration is not present in the GeoData on the EC520.	Contact your technician, site engineer, or surveyor.
GNSS Error. Autonomous GNSS.	The GNSS receiver is tracking satellites but there are no valid corrections.	Check the radio and cables. Check that the channel setting for the radio matches that of the base station.

Operational State	Problem	Solution
		Ask your site supervisor to check that the GNSS base station and any repeaters in the radio network are working correctly.
GNSS Error. No GNSS Position.	The GNSS receiver is not outputting data.	Check the GNSS receiver and cables, and ensure the antennas have a clear view of the sky.
GNSS Error. Old GNSS Position.	The GNSS receiver is not tracking enough satellites, or is still acquiring satellites and not yet computing a valid position.	Check the GNSS cables and receiver for faults, and ensure the antennas have a clear view of the sky.
GNSS Error. Out of Geoid Range.	The GNSS position is out of the range of the loaded geoid grid, or the correct project or Geoid has not been loaded.	Move the machine into range, or load a project with the correct Geoid for your location. If problems continue, contact your technician, site engineer, or surveyor.
New Base Station Coordinates Detected. Continued operation may give poor results. Contact your site supervisor.	The base station radio channel set up for your system, is also being used by another base station within radio range.	Contact your site supervisor.
Sensor Invalid. GNSS Receiver - Left/Right is disconnected.	Only one of the GNSS receivers is generating positions.	Check the cable and power for the receiver. If problems continue, contact your site supervisor.

5

Using Single-3D Guidance

In this chapter:

- Using UTS for Guidance
- Best Practices When Using Single-3D Guidance

You can use an MT900 Machine target with a Universal Total Station or a single GNSS receiver to provide high precision 3D guidance to the attachment tips.

A UTS system can provide higher accuracy positioning than GNSS, and can continue to work in circumstances that would usually degrade GNSS performance.

5.1 Using UTS for Guidance

Configure the machine to connect to a Universal Total Station (UTS) instrument for machine guidance.

To enable UTS guidance, select a UTS option as the positioning source in the Machine Setup screen.

5.1.1 The UTS Settings screen

The UTS Settings screen enables you to set the radio network ID and channel that both the system and UTS instrument communicate over. Ensure that the Channel and Network ID settings chosen on the machine match those set on the UTS instrument.

Note – Ensure that the UTS instrument has been set up in Machine Control mode using Trimble SCS900 or Siteworks and that the small screen on the front of the UTS instrument displays "Waiting for connection".

Note – Ensure that each machine using UTS guidance in the same area of a site has a unique Target ID for its MT900 Machine Target.

TIPS:

- Look at the small screen on the front of the UTS instrument to check which Channel and Network ID it is using.
- In the UTS Settings screen, toggle Auto Search off if you prefer to move the machine back to the last tracked position where the MT900 Machine Target was lost and manually start a search.

If you have an Operator Plus account you can configure the UTS tolerance thresholds via the Advanced button on the UTS Settings screen.

5.1.2 The UTS Management screen

The UTS Management screen enables you to select and use UTS instruments that are on the same radio channel and network as the machine and within radio range of the machine.

The system supports connection to a maximum of five UTS instruments.

TIPS:

- For best accuracy, select an instrument to use for guidance that is less than 200 m from the machine
- Set a custom name for your Trimble SPSx30 Total Station using Trimble SCS900 or Siteworks software.

Note – Use Trimble SCS900 or Siteworks software to connect to and set up UTS instruments in Machine Control mode before connecting to them from the machine. The accuracy of guidance on the machine depends on an accurate UTS instrument setup.

Note – The system will clear the bench and transition offsets if you stop the UTS instrument currently being used for guidance and start it again in a different position, or if you start using a different UTS instrument. A confirmation message ***Bench and Transition Offsets will be Cleared*** *is displayed before you can use the UTS instrument for guidance.*

Note – Tap within the UTS Name or Status column area to start or use the UTS instrument for guidance. Tapping on a UTS instrument row in any other areas will not be recognized. This prevents unintentional activation when your fingers are close to the screen in those columns.

Understanding UTS statuses

Item	Function
Configuring	Appears after you have tapped a UTS instrument to start it and while a radio connection is being established with it.
Searching	Appears when the UTS instrument is searching for the target.
Tracking	Appears when a UTS instrument is tracking the target.
Used for Guidance	Appears instead of the status of Tracking for the UTS instrument that you have tapped to use for guidance. The UTS instrument providing guidance is listed at the top and is highlighted orange.
Target Lost	Appears when the UTS instrument is not tracking the machine target and a search has failed to find the machine target, or when auto search is disabled and the UTS instrument is not tracking the machine target ***and*** you have not started a search.
UTS out of level	Appears when a UTS instrument reports that it is out of level. To correct this, stop the connection to that UTS instrument using the overflow menu ⋮, re-level it and redo the UTS Instrument setup using Trimble SCS900 or Siteworks before starting it again from the machine.
Configuration failed	Appears after you tap to start a UTS instrument but the radio connection to it from the machine fails to be successfully established. To correct this, stop the connection to that UTS instrument using the overflow menu ⋮ and redo the UTS Instrument setup using Trimble SCS900 or Siteworks before starting it again from the machine.
Out of Range	Appears if your UTS instrument is positioned at a distance greater than the Maximum Distance limit set for UTS tolerances. For more information, see Understanding UTS tolerances.

Understanding Horizontal and Vertical Differences

UTS guidance accuracy decreases as the distance increases from the UTS instrument used for guidance. Some jobs require using more than one UTS instrument to ensure accurate guidance over the length of a pass. In this case, you must transition between UTS instruments as the machine moves along the pass.

When multiple UTS instruments are used for a pass, the horizontal and vertical difference values displayed in the UTS Management screen are the differences between the target position reported by the UTS instrument used for guidance and the positions reported by any other UTS instruments tracking that target. The horizontal and vertical difference values provide an indication of the quality of the UTS instrument setup along a pass.

The first UTS instrument to track a target is assumed to have zero error. At each transition between UTS instruments, the horizontal and vertical differences between the previous UTS instrument and the new UTS instrument are compensated for by the system. These compensations accumulate with each transition into a value referred to as the transition offsets.

ATTENTION – If an action is performed that resets the transition offsets to zero during a pass, then there may be significant changes to the elevation of the formed surface and to horizontal guidance.

Understanding UTS information

Several icons appear in the UTS Management and work screens.

Icon	Description
	Displays when the distance to the UTS instrument has exceeded the warning threshold. For more information, see Understanding UTS tolerances.
	Displays when the distance to the UTS instrument is outside of the distance or position tolerances. For more information, see Understanding UTS tolerances.
	Tap to display the overflow menu for an instrument in the list. Use the overflow options as follows: • Tap to establish the radio connection to a UTS instrument and move it to the Connected Instruments list. *Note – Once a UTS instrument is started by a machine it is not available for other machines or surveyors to connect to.* • Tap to use a connected UTS instrument for guidance.

Icon	Description
	Note – Not available when the UTS instrument is out of range or is outside of the distance or position tolerances.For more information, see Understanding UTS tolerances. • Tap ■ to stop using the UTS instrument. This makes it available for other machines or surveyors on site to use. • Tap 🔍 to activate a search for the UTS instrument to find the MT900 target if it has lost tracking. • Tap ✖ to cancel a search in progress. • Tap ⚡ to view diagnostic information for the UTS instrument and the machine target.
	Displays when the UTS instrument is connected to an external power source.

Understanding UTS diagnostics

The Diagnostics pop-up information box displays status information for the UTS instrument and the MT900 machine target. Use this information to troubleshoot errors during operation.

The information box displays the name of the UTS instrument and its current status.

UTS

The fields in this area display status information for the UTS instrument.

Field	Explanation
Northing Easting Elevation	The setup location of the UTS instrument.
Compensator	The instrument's compensator status. For best results, ensure that this is enabled.
Instrument height	The setup height of the UTS instrument above a known control point.
Scale factor	The scale factor set on the UTS instrument.
PPM	The offset that corrects the error in the UTS instrument's Electronic Distance Meter (EDM) caused by temperature and pressure.
Point Name	The name of the point at which the UTS instrument was set up.

Machine Target

The fields in this area display the status of the machine target.

Field	Explanation
Northing Easting Elevation	The location of the center of the machine target as measured by the UTS instrument, but adjusted for mast lean.
Search window	The position of the machine target relative to the search window specified during UTS instrument set up.
Slope distance Horizontal angle Vertical angle	The observed location of the machine target relative to the UTS instrument.

Understanding UTS tolerances

If you are using more than one UTS instrument and are transitioning between them, you can configure the acceptable thresholds for the distance and position differences between the UTS instruments in the Web Interface. Use the thresholds to disable transitions between UTS instruments outside tolerances.

In the work screen, the following information is displayed for UTS instruments:

- The text ribbon can be configured to display a text item that shows which MT900 machine target on the machine is currently being tracked and its distance from the UTS instrument.
- The plan view displays the location of UTS instruments available on site. An orange icon indicates the UTS instrument in use.

Bench UTS

Benching matches the cutting edge elevation to a known elevation on site. It *does not* match the Northing or Easting horizontal position.

TIP – You can access the Bench UTS screen from the work settings menu or by tapping the Bench button in the UTS Management screen.

To bench:

1. Open the Bench UTS screen.
2. Position the attachment tip over the benchmark. You may move the machine, front linkage, or attachment to achieve this.
3. Level the attachment using the Current Reading of the slope displayed on the Bench UTS screen.

4. Using a tape measure, measure up from the benchmark to the attachment tip.
5. In the Attachment Tip field, select which tip you want to bench: Left, Center, or Right.
6. Add the elevation of the benchmark and the value measured in step 4. Write this value down and then enter that value into the Elevation - (A) field.
7. Tap Bench.
8. Before moving the machine go back into the Bench UTS screen and check that the Last Bench Elevation displayed matches the elevation written down in step 6.

Common UTS problems

Problem	Action
UTS instrument not displayed in UTS Management screen	Check that the radio channel and network on the machine are set correctly to match those of the UTS instrument.
UTS instrument tracks the Machine Target on another machine	In the UTS Settings screen, change the target ID on the machine. Ensure that each machine using UTS guidance in the same area of a site has a unique Target ID for its MT900 Machine Target.

5.1.3 Troubleshooting UTS guidance

The table below lists some of the error messages that may appear in the work screen and common error states during operation.

Operational State	Problem	Solution
Rotate Body	Not enough information to calculate an accurate position.	Without moving the tracks swing the machine's upper body through 90° in one direction without pausing. Continue rotating the machine's upper body until the operational state message disappears.
	The cab has rocked while rotating.	Shift the machine to stable ground to prevent rocking and restart the above calibration process.
UTS Out of Level	The tilt compensator on the UTS instrument is out of range.	1. Stop the UTS instrument. 2. Repeat the position setup for the instrument using Trimble SCS900 or Siteworks, making sure that the tripod is secure and the instrument is level.

Operational State	Problem	Solution
		3. Start the UTS instrument from the UTS Management screen.
Target Lost. Searching...	The UTS instrument used for guidance has lost line of sight to the machine target and Auto Search is enabled.	1. If required, tap Cancel to cancel the search. 2. Move the machine or remove any obstruction to the line of sight. 3. Start a search for the UTS instrument from the UTS Management screen. 4. Optionally, hold and point the UTS instrument at the target to regain the lock.
UTS - Low Battery xx% of battery remaining	This message appears briefly on screen, first when the UTS battery level is at 15%, and then when the UTS battery level reaches 5%.	You can choose to carry on working or select another instrument from the UTS Management screen. Guidance is still provided. Check the remaining battery level of the UTS instrument in the UTS Management screen.

5.2 Using Single GNSS for Guidance

If you have selected a single GNSS position source, then the selected design (or depth and slope surface) and any associated 3D data will be visible in the work screen. Guidance is given to the selected design or surface when the center of rotation (COR) is known.

When using single GNSS for guidance, the system will lose COR whenever you move the undercarriage. To regain COR, you need to rotate the machine's cab.

Limited guidance can continue when COR is lost, using the position of the GNSS receiver. The distance to avoidance zones is larger and is derived from the GNSS receiver and not the machine boundary when COR is lost.

Note – The cross–section and profile guidance views are not available when COR is lost.

Single GNSS on Cat Next Gen excavators allows reduced swing to regain the machine position and COR. You will be able to regain the COR with a single swing, however for best accuracy you should swing and return to your digging position.

TIPS:

- For best performance with single GNSS on Cat Next Gen excavators, use a MS9x5 or MS9x6 GNSS receiver. A MS9x2 receiver can also be used but with lower performance.
- For best accuracy with single GNSS, ask your technician to perform a Mast Measure-up in the Web Interface using the Total Station method.

5.3 Best Practices When Using Single-3D Guidance

The following best practices are recommended:

- Check and update cutting edge wear regularly.
- Maintain the machine in good condition to remove the play in joints that is caused by excessive wear.
- Ensure that the system has an accurately calculated center of rotation by rotating the machine's cab whenever you move the undercarriage.
- Ensure that the system has an accurately calculated center of rotation for operations that require high precision guidance, such as Avoidance Zones and Infield Designs.
- Rotate the machine's cab in a smooth and even motion without pausing when the system is calculating the machine's position. For best results, ensure that the machine is on stable ground during the rotation.

5.3.1 UTS

- Place the UTS on a tripod, free from vibrations caused by passing machinery or the wind.
- For best accuracy, place the UTS between 15 meters (50 feet) and 200 meters (650 feet), up to a maximum of 300 meters (1000 feet), from the MT900 target.
- Set up UTS instruments accurately using a minimum of three survey control points in a good geometric pattern.
- Optionally, check attachment tip elevation against an independent known elevation before starting work and remove any differences by benching.
- Ensure that the UTS has a continuous line of sight to the MT900 target. Check that the line of sight is maintained for all machine positions across the work area.

5.3.2 GNSS

- Depending on your GNSS Precision Tolerance setting, you may have to rotate the machine's cab through a larger angle of rotation for the system to accurately calculate the center of rotation.
- Select the GNSS Precision Tolerance suitable for your application from the System Settings menu.

  Note – The acceptable precision values are set in the Web Interface.

- If the distance from the GNSS mast to the center of rotation is less than 1.4 meters (4.6 feet), you may have to rotate the machine's cab through a larger angle of rotation. The Rotate Body progress bar may not update correctly while rotating.
- For best accuracy with single GNSS, ask your technician to perform a Mast Measure-up in the Web Interface using the Total Station method.

6

Using Depth Autos

In this chapter:

- Depth Autos Setup
- Depth Autos Optimization
- Best Practices When Using Depth Autos

This chapter introduces the use of automatic controls for depth.

TIP – For Tilt Autos, see 7.2 Tilt Autos Setup. For Depth and Tilt Autos, see 7.4 Depth and Tilt Autos Setup.

6.1 Depth Autos Setup

TIP – When using Autos features, avoid connecting the Operator App device to the system via Wi-Fi. Ensure that you use a wired connection.

Note – For Trimble Autos on Cat NGH series 07 machines or Cat NGH mini/micro machines, see Appendix B, Using Autos on other machine models.

Note – If you want to use Depth and Tilt Autos together, see 7.4 Depth and Tilt Autos Setup.

Depth Autos performs best when grading a finish surface. After you finish bulk excavating and approach final grade, engage Autos. The system automatically controls movement of the boom and attachment, while you manually control movement of the stick.

Note – Use Autos with a bucket, do not use it with any other type of attachment.

Note – For machines with a two-piece boom, do not move the upper boom while in Autos mode.

TIP – For information on best practices, see *6.3 Best Practices When Using Depth Autos*.

6.1.1 Depth Autos status indicators

The Depth Autos status indicators at the bottom right–hand corner of the work screen show you what state Autos are currently in.

Status indicator	Status
	Manual Depth Autos is armed, but not engaged.
	Manual interlock Depth Autos is armed but cannot be engaged. Possible reasons: Hydraulic lockout engaged, valve module failure.
	Depth Autos ready Depth Autos is armed and engaged, but is not active because the attachment is outside the control range.
	Depth Autos engaged Depth Autos is armed, engaged and active with the attachment inside the control range. In this state the system controls movement of the boom and attachment.

Status indicator	Status
	Depth Autos not ready Depth Autos is armed and engaged but cannot be active so Autos is temporarily suspended. Possible reason: GNSS precision is outside tolerance.

6.1.2 Arm and Engage Depth Autos

WARNING — Do not leave the cab when Depth Autos is engaged. When Depth Autos is engaged, the system will control movement of the boom and attachment. These movements could cause injury to anyone near the attachment, or damage to the machine. Always put the attachment on the ground and engage the hydraulic lockout before you leave the machine.
Do not use Depth Autos if the ground conditions are unstable. Only use Depth Autos to grade a finish surface. Disarm Depth Autos when you perform other applications, such as lifting.

To use Depth Autos:

1. If you are in Depth and Slope mode, bench the machine before you use Depth Autos.
   If you are in Design mode, load a design before you use Depth Autos.
2. Position the machine on solid, stable ground to prevent rocking.
3. Make sure the machine's hydraulic oil reaches its normal operating temperature (55°C/130°F).
4. Select High Power mode and turn the throttle up to maximum revs.
   Note – It is okay to use the auto idle function on your machine.
5. Position the attachment within the control range.

   TIP – Use the lightbars, cut/fills and buzzer to guide the attachment.

6. Access the Autos Setup screen via the Work Settings menu.
7. Arm Autos: In the Autos Setup screen, toggle Arm Autos on and tap Apply.
   A 30 second timer appears.
8. Confirm Autos: Press and hold the depth auto switch for more than one second, and then release it.

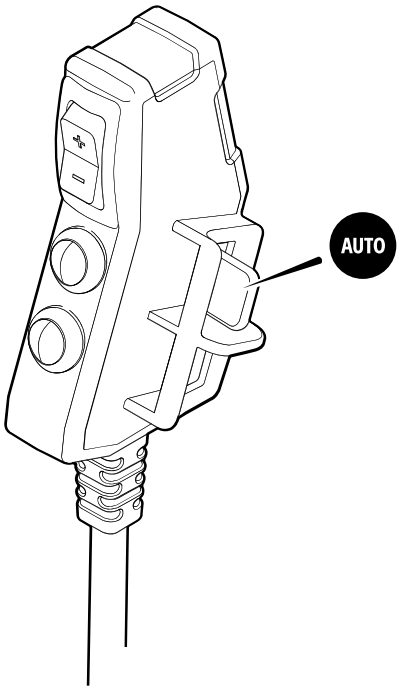

9. Engage Autos: Press and hold the depth auto switch as the attachment cutting edge approaches the design elevation. Move the stick lever slowly to start the automatic movement of the boom and attachment. Once Depth Autos engage and the boom and attachment are in motion, you can increase the velocity of the stick.

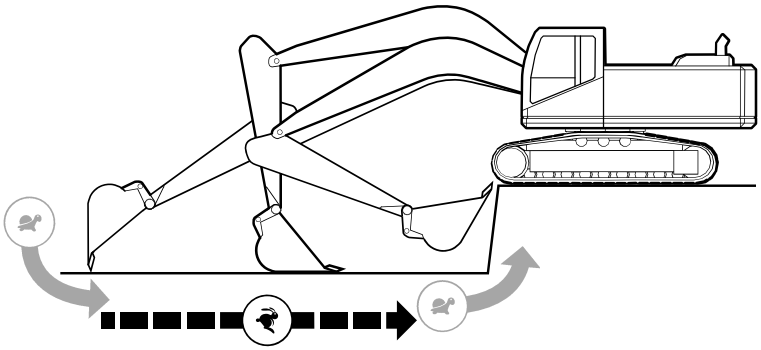

To temporarily disengage Depth Autos, let go of the depth auto switch. Be aware that while Autos is disengaged you can cut beneath the design. Sometimes you may purposefully want to dig below design, however if this is not the case make sure that you monitor your cut/fills and lightbars. Press the depth auto switch again to re-engage Depth Autos.

Select and Apply a Preset

You can select and apply the active preset via the Autos Setup or Autos Optimization screen. You can access these screens via the Work Settings menu. There is always at least

one preset stored which is the Default preset set by your technician in the Web Interface. This cannot be edited or deleted.

Select the active preset that you require and tap Apply.

You can create, edit or delete a preset via the Autos Optimization screen. For more information, see 6.2 Depth Autos Optimization.

6.1.3 Troubleshooting

The table below lists some of the error messages that may appear when you use Autos. You may need to enlist the help of your technician to resolve the error states.

Error Message	Possible cause(s)
Auto switch Fault	Suspect that the depth auto switch cable is disconnected, the depth auto switch or valve module is faulty, or the interconnecting cables are faulty.
Hydraulic Lockout Fault	Suspect that the pilot pressure switch attached to the valve manifold is disconnected from the valve cable, or the pilot pressure switch or connecting cables are faulty, or the valve module is faulty.
Proportional Valve Fault	Suspect that the valve is not connected or the valve or valve cable are faulty.
Master Enable Valve Fault	Suspect that the master enable valve is not connected or the master enable valve or valve cable are faulty.
Auto State Not Visible	Suspect that other menus or apps are obscuring the Autos icon.

6.2 Depth Autos Optimization

Note – For Trimble Autos on Cat NGH series 07 machines or Cat NGH mini/micro machines, see Appendix B, Using Autos on other machine models.

TIP – For information on how to use Autos, see *6.1 Depth Autos Setup*.

6.2.1 Presets

Presets allow you to save Autos Optimization settings so that you can restore them later. This is useful when there is a change in application or material.

Note – Presets are not dependent on the Auto mode selected. For example, if you create Preset 1 while in Depth and Tilt mode, the same boom and attachment speeds will appear if you select Preset 1 while in Depth mode and the same tilt speed will appear if you select Preset 1 while in Tilt mode.

Select and Apply a Preset

You can select and apply the active preset via the Autos Setup or Autos Optimization screen. You can access these screens via the Work Settings menu. There is always at least one preset stored which is the Default preset set by your technician in the Web Interface. This cannot be edited or deleted.

Select the active preset that you require and tap Apply.

Add a new preset

Note – When you add a new preset the Autos Optimization sliders are set to their default values.

1. In the Autos Optimization screen, tap Create. The Add New Preset screen opens.
2. Tap inside the *Preset Name* field and enter a descriptive name for the preset.
3. Tap Apply. You are returned to the Autos Optimization screen.
4. In the Autos Optimization screen, use the Autos sliders or the arrows to increase (▲) or decrease (▼) the values. For more information, see the section on optimizing the Autos performance.
5. The preset changes to a customized or temporary state (as indicated by the * next to the preset name and the italicized text).
6. Tap Apply to save the preset in its customized state.

   Note – All changes will be discarded if you select the original unmodified preset or a different preset. To save the customized preset permanently, tap Save As. See Save an edited preset with a new name.

Edit a preset

Note – If you try to switch to another preset while editing, the Discard All Changes? *confirmation message appears. Any unsaved changes you made will be lost if you tap Yes.*

1. In the Autos Optimization screen, select and apply a preset.
2. Use the Autos sliders or the arrows to increase (▲) or decrease (▼) any of the values.

   Any edit you make to a preset puts it into a customized and temporary state (as indicated by the * next to the preset name and the italicized text) .
3. To save the changes, tap Save As. The Save Preset As screen opens.
4. Turn on the Replace Existing slider. It will auto populate the Preset Name field with the name of the active preset. Tap Apply. You are returned to the Autos Optimization screen. The Preset Overwritten notification message appears.

TIP - To save the customized preset with a new name, see Save an edited preset with a new name.

Save an edited preset with a new name

Any active preset that is in a customized and temporary state (as indicated by the * next to the preset name and the italicized text) can be permanently saved as a new preset with a different name.

1. In the Autos Optimization screen, tap Save As. The Save Preset As screen opens.
2. Tap inside the *Preset Name* field and enter a descriptive name for the preset.
3. Tap Apply. You are returned to the Autos Optimization screen. The Preset Saved Successfully notification message appears.

TIP - If you turn on the Replace Existing slider, it will auto populate the Preset Name field with the name of the active preset. Tap Apply. You are returned to the Autos Optimization screen. The Preset Overwritten notification message appears.

Delete a preset

Note – You cannot delete the Default preset.

1. In the Autos Optimization screen, select a preset and tap the delete icon ( ) on the right-hand side of the preset.
2. A Delete confirmation message appears.
3. Tap Yes to confirm the deletion.

6.2.2 Optimize the Depth Autos performance

Note – Check that your technician has calibrated Autos before you try to adjust the values in the Autos Optimization screen.

You may need to adjust the Autos Optimization settings when, for example, you work with a different type of material (such as sand, dirt, or gravel).

Adjusting the settings in the Autos Optimization screen may improve the performance of Autos. For example, if the boom is overshooting above the target design grade when you pull in the stick, you can decrease the Boom Raise speed.

Autos performance is dependent on the speed that you pull in the stick. Experiment with different speeds to find the optimum for your machine and combination of attachment and material. For example:

- A slower or faster speed may produce a better result.
- A smooth take off speed helps.

- Do not vary the speed while optimizing the sliders.

1. Select High Power mode and turn the throttle up to maximum revs.
2. Using Depth Autos, make a test pass in the material you are working, so that you can judge the current performance of Autos.
   a. Place the attachment on grade at near full reach.
   b. Engage Autos.
   c. Watch how quickly or slowly the attachment moves to the on-grade position.

   Note – The behavior of Autos when the attachment is not loaded with the same material you will work with does not provide enough information to adjust the values in the Autos Optimization screen. Always use this information in conjunction with the results of a test pass.
3. To make any changes, in the Autos Optimization screen, select the appropriate type from the Optimize drop-down list.
4. Move the slider(s) to increase or decrease the values for the following:

TIP – The apex is where the boom changes from raising to lowering during a pass.

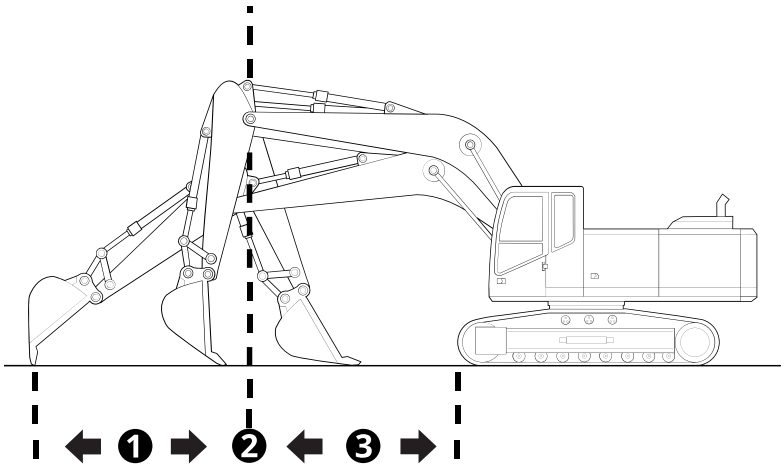

❶ Full reach to apex ❷ Apex ❸ Apex to fully crowded

Type	Option	Description
Attack Angle	Attack Angle	If required, move the Attack Angle slider to change the angle of the bottom of the attachment to the design surface. Zero is parallel, a negative value will

Type	Option	Description
		lower the back of the attachment and a positive value will raise the back of the attachment.
Rake	Rake In Before Apex	If the finished surface is below grade when you perform a Rake In pass from full reach to the apex, increase this value.
	Rake In After Apex	If the finished surface is below grade when you perform a Rake In pass from apex to fully crowded, increase this value.
	Rake Out Before Apex	If the finished surface is below grade when you perform a Rake Out pass from fully crowded to the apex, increase this value.
	Rake Out After Apex	If the finished surface is below grade when you perform a Rake Out pass from the apex to full reach, increase this value.
Flat Attachment In	Flat Attachment In (Boom) Before Apex	If the finished surface is below grade when you perform a Flat Attachment In pass from full reach to the apex, increase this value. This will control the boom raise and lower commands.
	Flat Attachment In (Boom) After Apex	If the finished surface is below grade when you perform a Flat Attachment In pass from the apex to fully crowded, increase this value. This will control the boom raise and lower commands.
	Flat Attachment In (Attachment) Before Apex	If the attachment changes angle too slowly and does not keep flat on grade when you perform a Flat Attachment In pass from full reach to the apex, increase this value.
	Flat Attachment In (Attachment) After Apex	If the attachment changes angle too slowly and does not keep flat on grade when you perform a Flat Attachment In pass from the apex to fully crowded,

Type	Option	Description
		increase this value.
Flat Attachment Out	Flat Attachment Out (Boom) Before Apex	If the finished surface is below grade when you perform a Flat Attachment Out pass from fully crowded to the apex, increase this value. This will control the boom raise and lower commands.
	Flat Attachment Out (Boom) After Apex	If the attachment changes angle too slowly and does not keep flat on grade when you perform a Flat Attachment Out pass from the apex to full reach, increase this value. This will control the boom raise and lower commands.
	Flat Attachment Out (Attachment) Before Apex	If the attachment changes angle too slowly and does not keep flat on grade when you perform a Flat Attachment Out pass from fully crowded to the apex, increase this value.
	Flat Attachment Out (Attachment) After Apex	If the attachment changes angle too slowly and does not keep flat on grade when you perform a Flat Attachment Out pass from the apex to full reach, increase this value.
Boom	Raise Speed	Looking at the surface from full reach to the apex, use Boom Raise Speed to make the attachment cut to grade. If the finished surface is consistently below grade, increase this value.
	Raise Response	If the boom is slow to rise, then increase this value.
	Lower Speed	Looking at the surface from the apex to fully crowded, use Boom Lower Speed to make the attachment cut to grade. If the finished surface is consistently above grade, increase this value.
	Lower Response	If the boom is slow to lower, then increase this value.

Type	Option	Description
	Take Off Speed	If the boom is not driving to grade within the first 0.5 m/1.5 ft after the stick is pulled, increase this value. Decreasing this value may reduce oscillations at the very beginning of the pass.
Joystick	Joystick Response Speed	If both the boom and attachment are slow to respond to stick movement, increase this value. Decreasing this value may reduce oscillations at the very beginning of the pass and oscillations observed when the stick movement is slow.
Attachment	Dump Speed	If the attachment is slow to dump for the full duration of the pass, increase this value.
	Dump Response	If the attachment is slow to dump, then increase this value.
	Curl Speed	If the attachment is slow to curl for the full duration of the pass, increase this value.
	Curl Response	If the attachment is slow to curl, then increase this value.

5. Tap Apply.
6. Make another test pass and compare the results. Repeat the process, if necessary, until you get the results you desire.

   You may need to enlist the help of your technician for further fine tuning and a precise check of the machine measure-up.

6.3 Best Practices When Using Depth Autos

Note – For Trimble Autos on Cat NGH series 07 machines or Cat NGH mini/micro machines, see Appendix B, Using Autos on other machine models.

Observe the following best practices to obtain optimal results when using Depth Autos.

Note – Use Autos with a bucket, do not use it with any other type of attachment.

Note – For machines with a two-piece boom, do not move the upper boom while in Autos mode.

WARNING — Do not leave the cab when Depth Autos is engaged. When Depth Autos is engaged, the system will control movement of the boom and attachment. These movements could cause injury to anyone near the attachment, or damage to the machine. Always put the attachment on the ground and engage the hydraulic lockout before you leave the machine.
Do not use Depth Autos if the ground conditions are unstable. Only use Depth Autos to grade a finish surface. Disarm Depth Autos when you perform other applications, such as lifting.

TIP – When using Autos features, avoid connecting the Operator App device to the system via Wi-Fi. Ensure that you use a wired connection.

6.3.1 Prepare the machine

Procedures that your technician or installer should perform before you use Depth Autos:

- Check that the machine is in good operating condition.
- Check that none of the connecting pins (boom, stick, attachment and cylinders) have excessive wear. If the machine is loose, the system cannot produce optimal results.
- Check that the measure-up and calibration of the machine is accurate. The surface you build cannot be better than the accuracy of these measurements and calibrations.
- Check that a valve calibration has been performed.

6.3.2 Best practices for operating excavators

Depth Autos performs best when grading a finish surface.

Procedures to perform every time you use Depth Autos

- Position the machine on solid, stable ground to prevent rocking.

  Rocking will negatively affect the performance of Depth Autos. It is important that both excavator tracks are firmly planted on stable ground. It is not essential that the ground is flat (a sloping surface is okay).

  Note – If you do not have a tilt bucket, the machine will need to sit on a surface that is close to the cross slope on the target surface. The roll of the excavator (slope of the machine measured from one track to the opposite track) will determine the cross slope of the finish surface.

TIP – If the attachment becomes unstable due to machine rocking, stop and wait until the attachment becomes stable before you try again. If the problem persists, prepare the ground that the machine tracks will sit on. Both tracks should sit on stable ground.

- Make sure the machine's hydraulic oil reaches its normal operating temperature (55°C/130°F).
- Select High Power mode and turn the throttle up to maximum revs.

  The hydraulic pump should always have maximum power available to it, so the hydraulic system can respond to automatic commands as quickly as possible.

  Note – It is okay to use the auto idle function on your machine.

TIP – When starting the machine, make sure that it hasn't defaulted to another mode such as Economic or Standard Power mode. Some machines will default to a mode other than High Power when they are started.

- Position the attachment within the control range.

TIP – Use the lightbars, cut/fills and buzzer to guide the attachment.

- If applicable, make sure the following features are disabled before you use Depth Autos:
  - Crane/heavy lift mode
  - Smart boom

Procedures to perform every time you change the attachment

- Check that a precise measure-up has been done for the attachment.
  - If you have an Operator Plus account you can create and edit attachments via the Advanced button on the Edit Attachment screen.
  - If you have an Operator account and it is a new attachment, your technician or dealer must enter the measure-up in the Web Interface before you can select it in the Attachments screen.
- Check the performance of Depth Autos every time you change from one attachment to another, especially if you are going from a large heavy attachment to a smaller one or vice-versa.

  If necessary, adjust the sliders for the boom and/or attachment in the Autos Optimization screen. This can optimize Autos performance.

Procedures to perform, as required

- Update the cutting edge length to account for the wear of the attachment. If required, update the value in the Edit Attachment screen, accessed via the Edit

button on the Attachments screen.

If the cutting edge has worn unevenly, use an average value. However, guidance will never be better than the range of differences in wear.

Note – The frequency at which you need to check the cutting edge length depends on factors such as the type of material you work with and the durability of the cutting edge.

- You can improve the performance of Depth Autos by adjusting the values in the Autos Optimization screen. For example, if the attachment is slow to curl for the full duration of the pass, increase the Attachment Curl Speed.

  Another example of when you might need to adjust the Autos Optimization values is when material conditions change.

Operating practices that can improve performance

- To improve grading performance when material conditions change, adjust the velocity of the stick movement, especially when you first initiate Depth Autos.

  If you use the attachment in a flat position on hard clay, you can initiate the stick lever quickly.

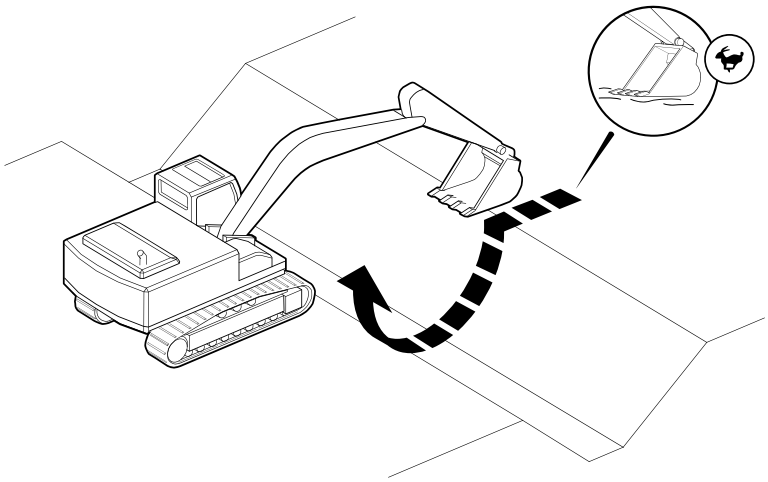

  If you use the attachment in the raking position in loose gravel, initiate the stick lever slowly.

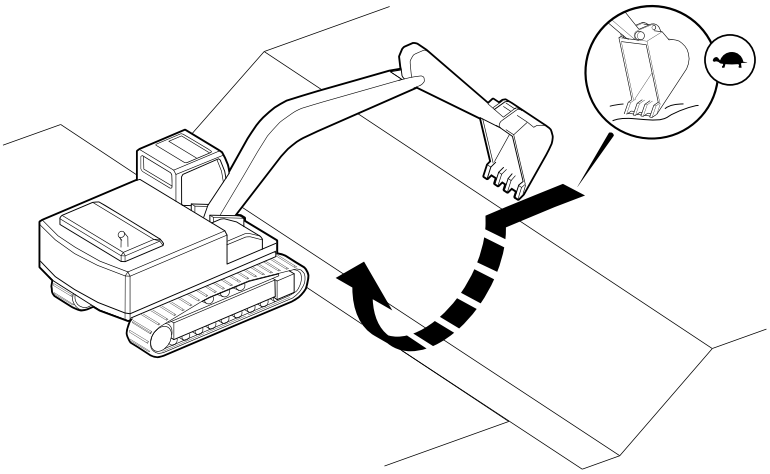

- Decrease the stick velocity when you reach and pass through the apex of the stick (when the boom changes from rising to lowering) or at transitions of slopes.
- If you use the attachment in a flat position when the cutting edge transitions from a sloping to flat design, Depth Autos is often not quick enough to raise the boom and dump the attachment, while also keeping the attachment locked to the design plane. As a result the attachment can unsnap from the design, as shown below.

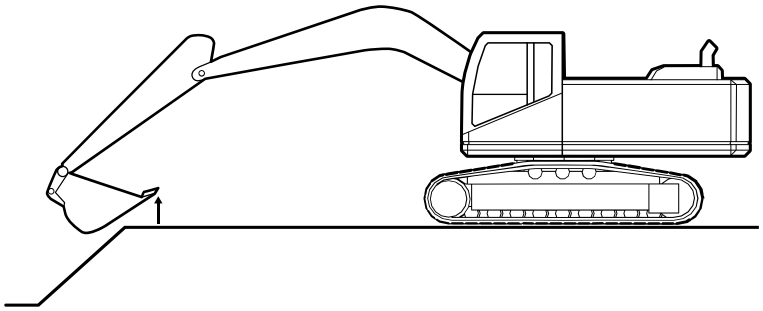

To avoid this, either grade through the transition with the attachment in the raking position or pass through the transition with a flat attachment and then re-position the attachment to grade the flat section, as shown below.

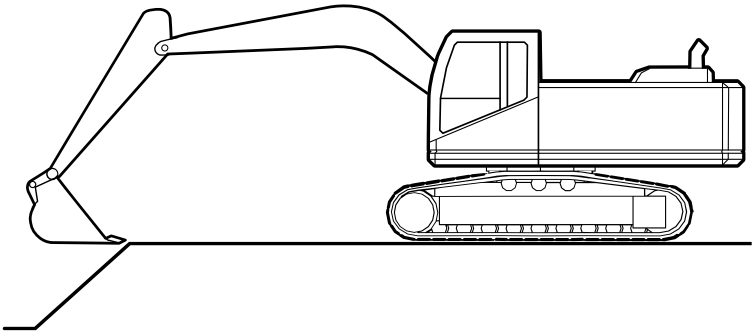

- To achieve the best results, leave the surface a little high before you make the final pass. The attachment is more stable while it is resting on material versus in the air.
- Have the attachment flat against the design surface for the final pass.

  Making a pass in loose material while the attachment is in the rake position will allow material to fall between the teeth. This results in the surface being a little high. For best accuracy, make the final pass with the attachment flat against the design surface.
- To avoid under or over-cutting at the start of a flat attachment pass, allow the attachment to snap to design slope before increasing stick velocity.
- It is best to manually reach design grade with the attachment and then engage Depth Autos while you slowly pull in the stick. The boom transition into Autos is smoother while the stick is in motion versus no motion.

  Avoid engaging Depth Autos while there is no stick motion and the stick is fully extended with the attachment in the rake position. If you do need to start a pass in this position, move the stick slowly to prevent cutting below the target surface.
- When making a pass that will result in full stick cylinder extension, release the depth auto switch just prior to reaching full cylinder extent. This will allow smoother operation and avoid unwanted boom reaction when stalling the stick in Depth Autos.
- The attachment attack angle that will provide optimal grading performance in most applications is to align the cutting edge with the design surface.

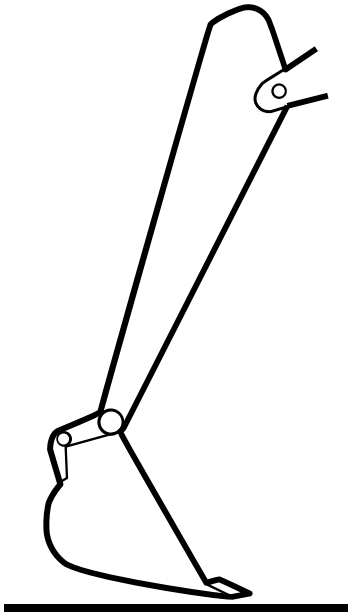

If the attachment attack angle is not aggressive enough, it will ride on the bottom of the attachment and will not allow the cutting edge to reach design. This will result in a system that will continually cut high and not get down to grade.

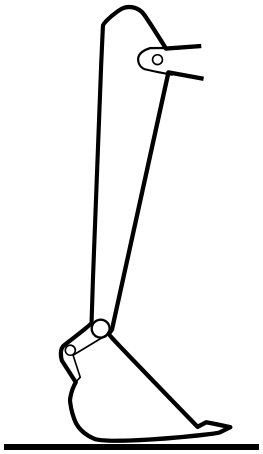

If the attachment attack angle is too aggressive, it will cut into the design when it encounters a load.

TIP – You may need to use this aggressive angle when you work with very hard material.

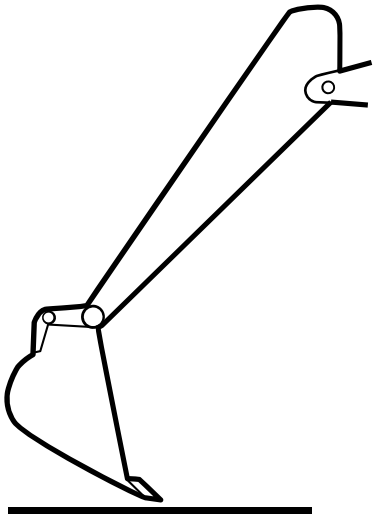

- In the Autos Optimization screen you can also move the Attachment Attack Angle slider to change the angle of the bottom of the attachment to the design surface.

  Zero is parallel, a negative value will lower the back of the attachment and a positive value will raise the back of the attachment

7

Using Tiltrotator Attachments

In this chapter:

- Using Tiltrotators
- Tilt Autos Setup
- Tilt Autos Optimization
- Depth and Tilt Autos Setup
- Depth and Tilt Autos Optimization
- Best Practices When Using Tilt Autos

This chapter introduces the use of tiltrotator attachments with the system.

7.1 Using Tiltrotators

TIP – When using Autos features, avoid connecting the Operator App device to the system via Wi-Fi. Ensure that you use a wired connection.

A tilting rotating coupler (tiltrotator) enables you to:

- Rotate the attachment to any angle.
- Tilt the attachment up to 40° from a normal fixed-attachment position, at any rotation angle.

In the display's layout views, the appearance of a tiltrotator attachment is different to that of a standard attachment.

7.1.1 Plan view

For the plan view, the perspective does not change when the attachment rotates.

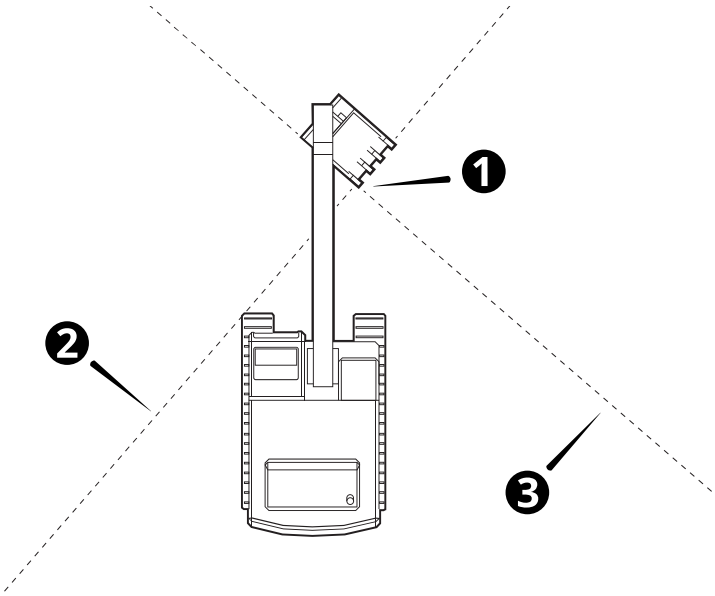

- The attachment (❶) rotates independent of the machine heading.
- The cross section line (❷) rotates with the attachment. It is parallel to the cutting edge.
- The profile line (❸) rotates with the attachment. It is perpendicular to the cutting edge.

7.1.2 Cross section view

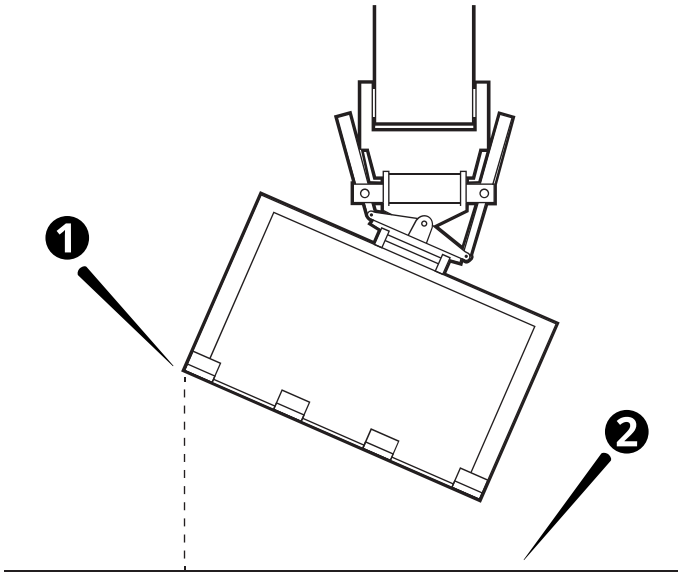

- The cross section view is aligned to the attachment heading (perpendicular to the cutting edge) and rotates with the attachment (❶)
- The cross section line (❷) runs along the design surface underneath the cutting edge and rotates with the attachment (❶).

Note – In the Overlays screen if you turn on visibility of the machine, it will not apply to this view as the machine could block the view of the attachment while it is rotating.

7.1.3 Profile view

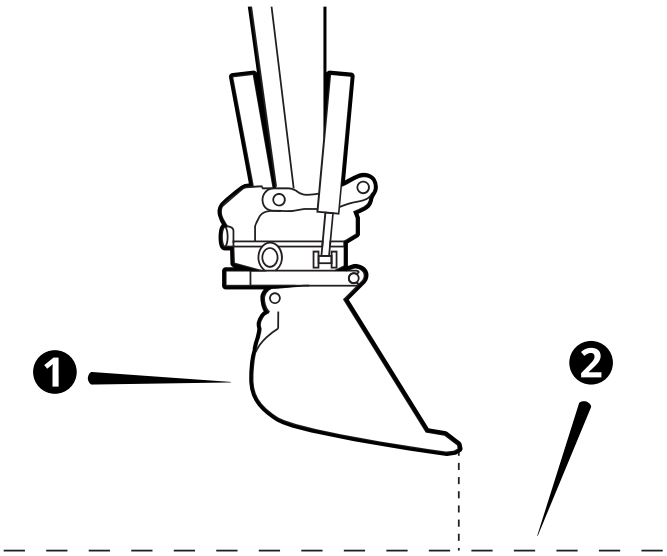

- The profile view is aligned perpendicular to the attachment heading and rotates with the attachment (❶).
- The profile line (❷) runs along the design surface underneath the focus point, in the direction of the attachment heading.

Note – In the Overlays screen if you turn on visibility of the machine, it will not apply to this view as the machine could block the view of the attachment while it is rotating.

7.1.4 3D view

For the 3D view, the perspective does not change when the attachment rotates. The profile and cross section lines rotate with the attachment.

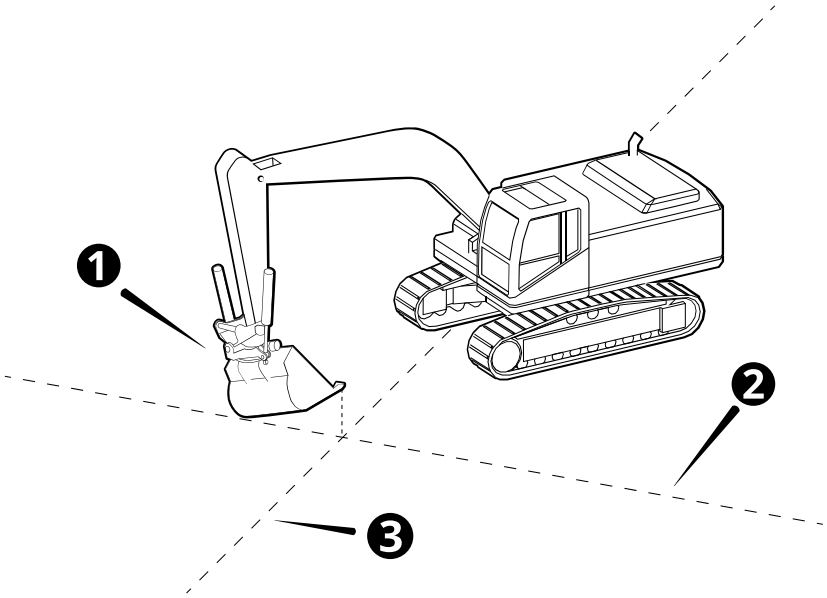

- The attachment (❶) rotates independently of the machine heading.
- The cross section line (❷) runs along the design surface underneath the cutting edge and rotates with the attachment (❶).
- The profile line (❸) runs along the design surface underneath the focus point, in the direction of the attachment heading.

7.1.5 Useful text items

Text items display information on the work screen. When you use a tiltrotator the following text item is available: Attachment Rotation.

7.2 Tilt Autos Setup

TIP – When using Autos features, avoid connecting the Operator App device to the system via Wi-Fi. Ensure that you use a wired connection.

Note – For Trimble Autos on Cat NGH series 07 machines or Cat NGH mini/micro machines, see Appendix B, Using Autos on other machine models.

Note – If you want to use Depth and Tilt Autos together, see 7.4 Depth and Tilt Autos Setup.

Tilt Autos performs best when grading a finish surface. After you finish bulk excavating and approach final grade, engage Autos. The system automatically controls movement of the attachment tilt, while you manually control movement of the rest of the front linkage.

Tilt Autos can automatically move the tilting attachment at rotation angles 70° from forward and 70° from backwards. The tilt cylinders do not rotate with the attachment, so outside of this range the cylinders drive attachment dump/curl instead of tilt. If the attachment falls outside this range, you get the message: Attachment tilt is outside of measurable range.

Note – This does not apply if you have an engcon tiltrotator with protocol ePS 2.0.

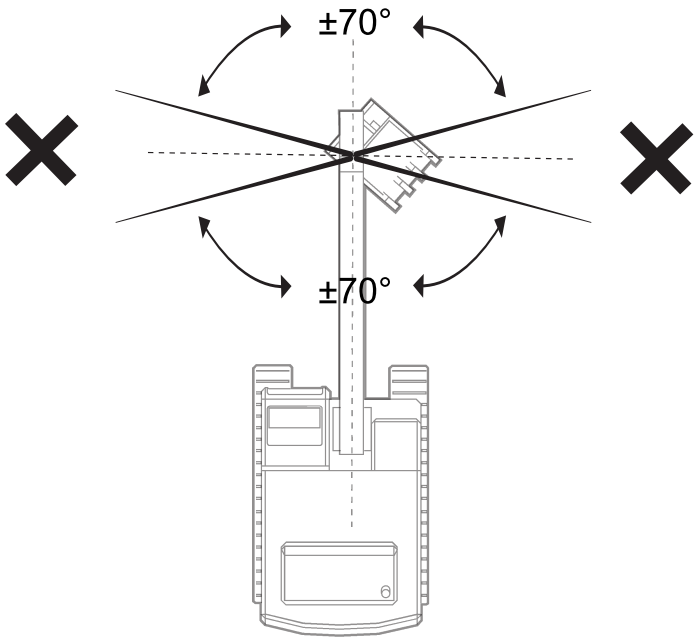

TIP – For information on best practices, see *7.6 Best Practices When Using Tilt Autos*.

7.2.1 Tilt Autos status indicators

The Tilt Autos status indicators at the bottom left–hand corner of the work screen show you what state Autos are currently in.

Status indicator	Status
MANUAL	*Manual* Tilt Autos is armed, but not engaged.
MANUAL	*Manual interlock* Tilt Autos is armed but cannot be engaged. Possible reasons: Tiltrotator function not currently supported, auto state in fault.
AUTO	*Tilt Autos ready* Tilt Autos is armed and engaged, but is not active because the attachment is outside the control range.
AUTO	*Tilt Autos engaged* Tilt Autos is armed, engaged and active with the attachment inside the control range. In this state the system controls movement of the attachment.
AUTO	*Tilt Autos not ready* Tilt Autos is armed and engaged but cannot be active so Autos is temporarily suspended. Possible reasons: GNSS precision is outside tolerance, attachment is off design.

7.2.2 Arm and Engage Tilt Autos

WARNING — When Tilt Autos is engaged, the system will control movement of the attachment tilt. These movements could cause injury to anyone near the attachment, or damage to the machine. Always put the attachment on the ground and engage the hydraulic lockout before you leave the machine.
Do not use Tilt Autos when somebody is working near the attachment or if the ground conditions are unstable. Only use Tilt Autos to grade a finish surface. Disarm Tilt Autos when you perform other applications, such as lifting.

To use Tilt Autos:

1. If you are in Depth and Slope mode, bench the machine before you use Tilt Autos.
   If you are in Design mode, load a design before you use Tilt Autos.
2. Position the machine on solid, stable ground to prevent rocking.
3. Make sure the machine's hydraulic oil reaches its normal operating temperature (55°C/130°F).
4. Select High Power mode and turn the throttle up to maximum revs.
   Note – You can use the auto idle function on your machine.

5. Position the attachment within the control range.

TIP – Use the lightbars, cut/fills and buzzer to guide the attachment.

6. Enable the Auto function on the tiltrotator controller.
7. Access the Autos Setup screen via the Work Settings menu.
8. Arm Autos: In the Autos Setup screen, select Tilt as the auto mode. Toggle Arm Autos on and tap Apply.

   A 30 second timer appears.
9. Confirm Autos: Press and hold the tilt auto switch (as per your tiltrotator manufacturer instructions) for more than one second, and then release it.
10. Engage Autos: Press and hold the tilt auto switch as the attachment cutting edge approaches the design elevation.

    To temporarily disengage Tilt Autos, let go of the tilt auto switch. Be aware that while Autos is disengaged you can cut below the design. Sometimes you may purposefully want to dig below design, however if this is not the case make sure that you monitor your cut/fills and lightbars. Press the tilt auto switch again to re-engage Tilt Autos.

Select and Apply a Preset

You can select and apply the active preset via the Autos Setup or Autos Optimization screen. You can access these screens via the Work Settings menu. There is always at least one preset stored which is the Default preset set by your technician in the Web Interface. This cannot be edited or deleted.

Select the active preset that you require and tap Apply.

You can create, edit or delete a preset via the Autos Optimization screen. For more information, see 7.3 Tilt Autos Optimization.

7.2.3 Troubleshooting

The table below lists some of the error messages that may appear when you use Autos. You may need to enlist the help of your technician to resolve the error states.

Error Message	Possible cause(s)
Auto State Not Visible	Suspect that other menus or apps are obscuring the Autos icon.

7.3 Tilt Autos Optimization

TIP – When using Autos features, avoid connecting the Operator App device to the system via Wi-Fi. Ensure that you use a wired connection.

Note – For Trimble Autos on Cat NGH series 07 machines or Cat NGH mini/micro machines, see Appendix B, Using Autos on other machine models.

Note – If you want to use Depth and Tilt Autos together, see 7.5 Depth and Tilt Autos Optimization.

TIP – For information on how to use Autos, see *7.2 Tilt Autos Setup*.

7.3.1 Presets

Presets allow you to save Autos Optimization settings so that you can restore them later. This is useful when there is a change in application or material.

Note – Presets are not dependent on the Auto mode selected. For example, if you create Preset 1 while in Depth and Tilt mode, the same boom and attachment speeds will appear if you select Preset 1 while in Depth mode and the same tilt speed will appear if you select Preset 1 while in Tilt mode.

Select and Apply a Preset

You can select and apply the active preset via the Autos Setup or Autos Optimization screen. You can access these screens via the Work Settings menu. There is always at least one preset stored which is the Default preset set by your technician in the Web Interface. This cannot be edited or deleted.

Select the active preset that you require and tap Apply.

Add a new preset

Note – When you add a new preset the Autos Optimization sliders are set to their default values.

1. In the Autos Optimization screen, tap Create. The Add New Preset screen opens.
2. Tap inside the *Preset Name* field and enter a descriptive name for the preset.
3. Tap Apply. You are returned to the Autos Optimization screen.
4. In the Autos Optimization screen, use the Autos sliders or the arrows to increase (▲) or decrease (▼) the values. For more information, see the section on optimizing the Autos performance.
5. The preset changes to a customized or temporary state (as indicated by the * next to the preset name and the italicized text).
6. Tap Apply to save the preset in its customized state.

Note – All changes will be discarded if you select the original unmodified preset or a different preset. To save the customized preset permanently, tap Save As. See *Save an edited preset with a new name.*

Edit a preset

Note – If you try to switch to another preset while editing, the Discard All Changes? *confirmation message appears. Any unsaved changes you made will be lost if you tap Yes.*

1. In the Autos Optimization screen, select and apply a preset.
2. Use the Autos sliders or the arrows to increase (▲) or decrease (▼) any of the values.

   Any edit you make to a preset puts it into a customized and temporary state (as indicated by the * next to the preset name and the italicized text) .
3. To save the changes, tap Save As. The Save Preset As screen opens.
4. Turn on the Replace Existing slider. It will auto populate the Preset Name field with the name of the active preset. Tap Apply. You are returned to the Autos Optimization screen. The Preset Overwritten notification message appears.

TIP - To save the customized preset with a new name, see Save an edited preset with a new name.

Save an edited preset with a new name

Any active preset that is in a customized and temporary state (as indicated by the * next to the preset name and the italicized text) can be permanently saved as a new preset with a different name.

1. In the Autos Optimization screen, tap Save As. The Save Preset As screen opens.
2. Tap inside the *Preset Name* field and enter a descriptive name for the preset.
3. Tap Apply. You are returned to the Autos Optimization screen. The Preset Saved Successfully notification message appears.

TIP - If you turn on the Replace Existing slider, it will auto populate the Preset Name field with the name of the active preset. Tap Apply. You are returned to the Autos Optimization screen. The Preset Overwritten notification message appears.

Delete a preset

Note – You cannot delete the Default preset.

1. In the Autos Optimization screen, select a preset and tap the delete icon (🗑) on the right-hand side of the preset.

2. A **Delete** confirmation message appears.
3. Tap Yes to confirm the deletion.

7.3.2 Optimize the Tilt Autos performance

Note – Check that your technician has calibrated Autos before you try to adjust the values in the Autos Optimization screen.

You may need to adjust the Autos Optimization values when, for example, you work with a different type of material (such as sand, dirt, or gravel).

Adjusting the values in the Autos Optimization screen may improve the performance of Autos. For example, adjusting the tilt sensitivity setting may increase the smoothness of the tilt movements.

Autos performance is dependent on the speed that you pull in the stick. Experiment with different speeds to find the optimum for your machine and combination of attachment and material. For example:

- A slower or faster speed may produce a better result.
- A smooth take off speed helps.
- Do not vary the speed while optimizing the sliders.

1. Select High Power mode and turn the throttle up to maximum revs.
2. Using Tilt Autos, make a test pass in the material you are working, so that you can judge the current performance of Autos.
   a. Place the attachment on grade at near full reach.
   b. Engage Autos.
   c. Watch how quickly or slowly the attachment moves to the on-grade position.

   Note – The behavior of Autos when the attachment is not loaded with the same material you will work with does not provide enough information to adjust the values in the Autos Optimization screen. Always use this information in conjunction with the results of a test pass.
3. To make any changes, in the Autos Optimization screen, move the slider(s) to increase or decrease the values for the following:

Type	Option	Description
Attachment	Tilt Speed	If the attachment is slow to tilt, increase this value.
	Tilt Sensitivity	If the automatic tilt adjustment is erratic or jerky, decrease this value.

4. Tap Apply.

5. Make another test pass and compare the results. Repeat the process, if necessary, until you get the results you desire.

   You may need to enlist the help of your technician for further fine tuning and a precise check of the machine measure-up.

7.4 Depth and Tilt Autos Setup

TIP – When using Autos features, avoid connecting the Operator App device to the system via Wi-Fi. Ensure that you use a wired connection.

Note – For Trimble Autos on Cat NGH series 07 machines or Cat NGH mini/micro machines, see Appendix B, Using Autos on other machine models.

Note – If you only want to use Depth Autos, see 6.1 Depth Autos Setup. If you only want to use Tilt Autos, see 7.2 Tilt Autos Setup. This chapter is for using Depth and Tilt Autos together.

Depth and Tilt Autos performs best when grading a finish surface. After you finish bulk excavating and approach final grade, engage Autos. The system automatically controls movement of the boom and attachment, while you manually control movement of the stick.

Note – Use Depth and Tilt Autos with a bucket, do not use it with any other type of attachment.

Note – For machines with a two-piece boom, do not move the upper boom while in Autos mode.

TIP – For information on best practices, see *6.3 Best Practices When Using Depth Autos* and *7.6 Best Practices When Using Tilt Autos*.

7.4.1 Depth and Tilt Autos status indicators

The Depth and Tilt Autos status indicators at the bottom left (Tilt) and right–hand corner (Depth) of the work screen show you what state Autos are currently in.

Status indicator	Status
	Manual Depth and Tilt Autos is armed, but not engaged.
	Manual interlock Depth and Tilt Autos is armed but cannot be engaged. Possible reasons: Hydraulic lockout engaged, valve module failure.
	Depth and Tilt Autos ready

Status indicator	Status
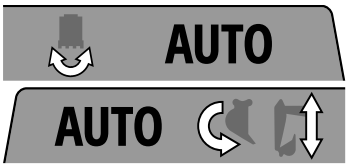	Depth and Tilt Autos is armed and engaged, but is not active because the attachment is outside the control range.
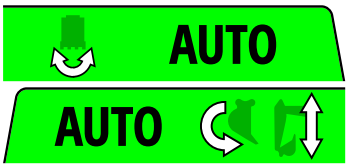	*Depth and Tilt Autos engaged* Depth and Tilt Autos is armed, engaged and active with the attachment inside the control range. In this state the system controls movement of the boom and attachment.
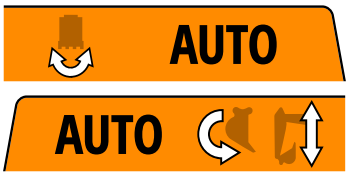	*Depth and Tilt Autos not ready* Depth and Tilt Autos is armed and engaged but cannot be active so Autos is temporarily suspended. Possible reason: GNSS precision is outside tolerance.

7.4.2 Arm and Engage Depth and Tilt Autos

WARNING — When Depth and Tilt Autos is engaged, the system will control movement of the boom and attachment. These movements could cause injury to anyone near the attachment, or damage to the machine. Always put the attachment on the ground and engage the hydraulic lockout before you leave the machine.
Do not use Depth and Tilt Autos when somebody is working near the attachment or if the ground conditions are unstable. Only use Depth and Tilt Autos to grade a finish surface. Disarm Depth and Tilt Autos when you perform other applications, such as lifting.

To use Depth and Tilt Autos:

1. If you are in Depth and Slope mode, bench the machine before you use Depth and Tilt Autos.
   If you are in Design mode, load a design before you use Depth and Tilt Autos.
2. Position the machine on solid, stable ground to prevent rocking.
3. Make sure the machine's hydraulic oil reaches its normal operating temperature (55°C/130°F).
4. Select High Power mode and turn the throttle up to maximum revs.
   Note – It is okay to use the auto idle function on your machine.
5. Position the attachment within the control range.

TIP – Use the lightbars, cut/fills and buzzer to guide the attachment.

6. Enable the Auto function on the tiltrotator controller.
7. Access the Autos Setup screen via the Work Settings menu.
8. Arm Autos: In the Autos Setup screen, select Depth and Tilt as the auto mode and then toggle Arm Autos on and tap Apply.

   A 30 second timer appears.
9. Confirm Autos:
   - Press and hold the depth auto switch for more than one second, and then release it.

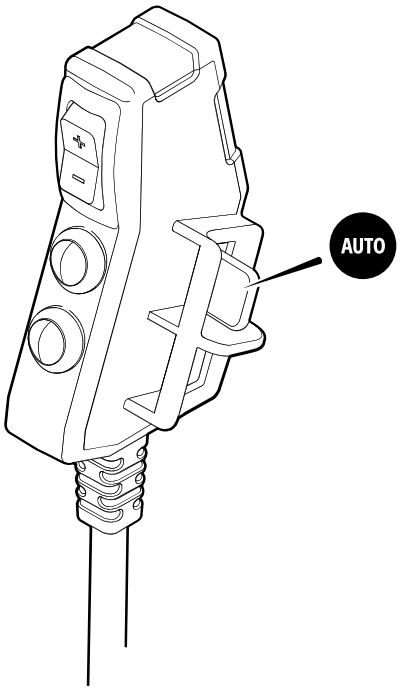

   - Press and hold the tilt auto switch (as per your tiltrotator manufacturer instructions) for more than one second, and then release it.

   Note – The order in which you press the auto switches is not important, but you must press each switch for at least one second, and then release it.
10. Engage Autos: Press and hold both the depth auto switch and the tilt auto switch as the attachment cutting edge approaches the design elevation. Move the stick lever slowly to start the automatic movement of the boom and attachment. Once Depth and Tilt Autos engage and the boom and attachment are in motion, you can increase the velocity of the stick.

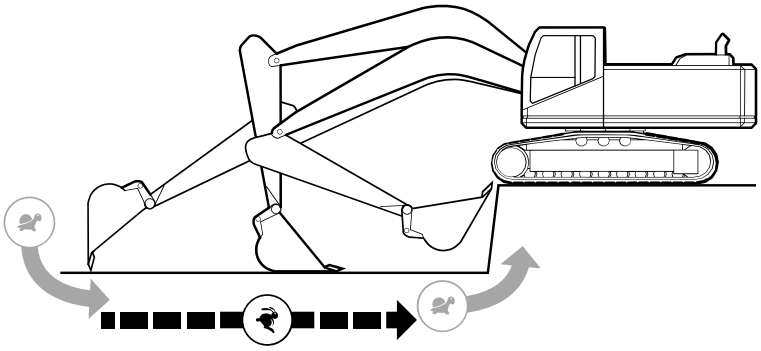

To temporarily disengage Depth and Tilt Autos, let go of the depth auto switch and the tilt auto switch. Be aware that while Autos is disengaged you can cut beneath the design. Sometimes you may purposefully want to dig below design, however if this is not the case make sure that you monitor your cut/fills and lightbars. Press the depth auto switch and the tilt auto switch again to re-engage Depth and Tilt Autos.

Select and Apply a Preset

You can select and apply the active preset via the Autos Setup or Autos Optimization screen. You can access these screens via the Work Settings menu. There is always at least one preset stored which is the Default preset set by your technician in the Web Interface. This cannot be edited or deleted.

Select the active preset that you require and tap Apply.

You can create, edit or delete a preset via the Autos Optimization screen. For more information, see 7.5 Depth and Tilt Autos Optimization.

7.4.3 Troubleshooting

The table below lists some of the error messages that may appear when you use Autos. You may need to enlist the help of your technician to resolve the error states.

Error Message	Possible cause(s)
Auto switch Fault	Suspect that the depth auto switch cable is disconnected, the depth auto switch or valve module is faulty, or the interconnecting cables are faulty.
Hydraulic Lockout Fault	Suspect that the pilot pressure switch attached to the valve manifold is disconnected from the valve cable, or the pilot pressure switch or connecting cables are faulty, or the valve module is faulty.
Proportional Valve Fault	Suspect that the valve is not connected or the valve or valve cable are faulty.
Master Enable Valve Fault	Suspect that the master enable valve is not connected

Error Message	Possible cause(s)
	or the master enable valve or valve cable are faulty.
Auto State Not Visible	Suspect that other menus or apps are obscuring the Autos icon.

7.5 Depth and Tilt Autos Optimization

Note – For Trimble Autos on Cat NGH series 07 machines or Cat NGH mini/micro machines, see Appendix B, Using Autos on other machine models.

Note – If you only want to use Depth Autos, see 6.2 Depth Autos Optimization. If you only want to use Tilt Autos, see 7.3 Tilt Autos Optimization. This chapter is for using Depth and Tilt Autos together.

TIP – For information on how to use Autos, see *7.4 Depth and Tilt Autos Setup*.

7.5.1 Presets

Presets allow you to save Autos Optimization settings so that you can restore them later. This is useful when there is a change in application or material.

Note – Presets are not dependent on the Auto mode selected. For example, if you create Preset 1 while in Depth and Tilt mode, the same boom and attachment speeds will appear if you select Preset 1 while in Depth mode and the same tilt speed will appear if you select Preset 1 while in Tilt mode.

Select and Apply a Preset

You can select and apply the active preset via the Autos Setup or Autos Optimization screen. You can access these screens via the Work Settings menu. There is always at least one preset stored which is the Default preset set by your technician in the Web Interface. This cannot be edited or deleted.

Select the active preset that you require and tap Apply.

Add a new preset

Note – When you add a new preset the Autos Optimization sliders are set to their default values.

1. In the Autos Optimization screen, tap Create. The Add New Preset screen opens.
2. Tap inside the *Preset Name* field and enter a descriptive name for the preset.
3. Tap Apply. You are returned to the Autos Optimization screen.

4. In the Autos Optimization screen, use the Autos sliders or the arrows to increase (▲) or decrease (▼) the values. For more information, see the section on optimizing the Autos performance.
5. The preset changes to a customized or temporary state (as indicated by the * next to the preset name and the italicized text).
6. Tap Apply to save the preset in its customized state.

   Note – All changes will be discarded if you select the original unmodified preset or a different preset. To save the customized preset permanently, tap Save As. See *Save an edited preset with a new name*.

Edit a preset

Note – If you try to switch to another preset while editing, the Discard All Changes? *confirmation message appears. Any unsaved changes you made will be lost if you tap Yes.*

1. In the Autos Optimization screen, select and apply a preset.
2. Use the Autos sliders or the arrows to increase (▲) or decrease (▼) any of the values.

   Any edit you make to a preset puts it into a customized and temporary state (as indicated by the * next to the preset name and the italicized text) .
3. To save the changes, tap Save As. The Save Preset As screen opens.
4. Turn on the Replace Existing slider. It will auto populate the Preset Name field with the name of the active preset. Tap Apply. You are returned to the Autos Optimization screen. The Preset Overwritten notification message appears.

TIP - To save the customized preset with a new name, see Save an edited preset with a new name.

Save an edited preset with a new name

Any active preset that is in a customized and temporary state (as indicated by the * next to the preset name and the italicized text) can be permanently saved as a new preset with a different name.

1. In the Autos Optimization screen, tap Save As. The Save Preset As screen opens.
2. Tap inside the *Preset Name* field and enter a descriptive name for the preset.
3. Tap Apply. You are returned to the Autos Optimization screen. The Preset Saved Successfully notification message appears.

TIP - If you turn on the Replace Existing slider, it will auto populate the Preset Name field with the name of the active preset. Tap Apply. You are returned to the Autos Optimization screen. The Preset Overwritten notification message appears.

Delete a preset

Note – You cannot delete the Default preset.

1. In the Autos Optimization screen, select a preset and tap the delete icon (🗑) on the right-hand side of the preset.
2. A Delete confirmation message appears.
3. Tap Yes to confirm the deletion.

7.5.2 Optimize the Depth and Tilt Autos performance

Note – Check that your technician has calibrated Autos before you try to adjust the values in the Autos Optimization screen.

You may need to adjust the Autos Optimization settings when, for example, you work with a different type of material (such as sand, dirt, or gravel).

Adjusting the settings in the Autos Optimization screen may improve the performance of Autos. For example, if the boom is overshooting above the target design grade when you pull in the stick, you can decrease the Boom Raise speed.

Autos performance is dependent on the speed that you pull in the stick. Experiment with different speeds to find the optimum for your machine and combination of attachment and material. For example:

- A slower or faster speed may produce a better result.
- A smooth take off speed helps.
- Do not vary the speed while optimizing the sliders.

1. Select High Power mode and turn the throttle up to maximum revs.
2. Using Depth and Tilt Autos, make a test pass in the material you are working, so that you can judge the current performance of Autos.
   a. Place the attachment on grade at near full reach.
   b. Engage Autos.
   c. Watch how quickly or slowly the attachment moves to the on-grade position.

   Note – The behavior of Autos when the attachment is not loaded with the same material you will work with does not provide enough information to adjust the values in the Autos Optimization screen. Always use this information in conjunction with the results of a test pass.
3. To make any changes, in the Autos Optimization screen, select the appropriate type from the Optimize drop-down list.
4. Move the slider(s) to increase or decrease the values for the following:

TIP – The apex is where the boom changes from raising to lowering during a pass.

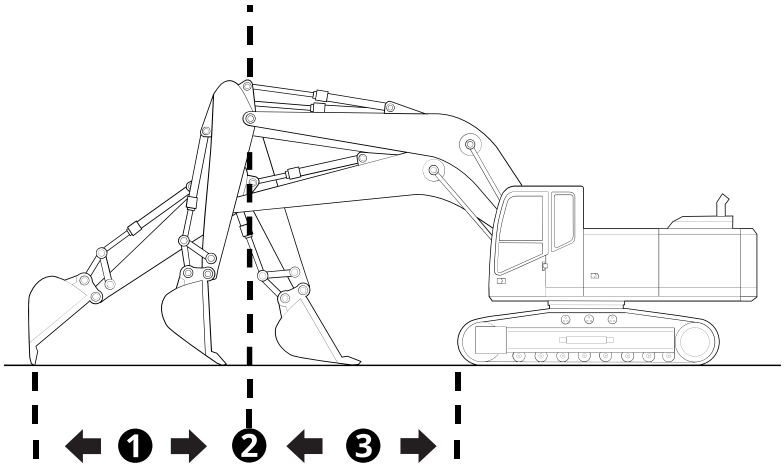

❶ Full reach to apex ❷ Apex ❸ Apex to fully crowded

Type	Option	Description
Attack Angle	Attack Angle	If required, move the Attack Angle slider to change the angle of the bottom of the attachment to the design surface. Zero is parallel, a negative value will lower the back of the attachment and a positive value will raise the back of the attachment.
Rake	Rake In Before Apex	If the finished surface is below grade when you perform a Rake In pass from full reach to the apex, increase this value.
	Rake In After Apex	If the finished surface is below grade when you perform a Rake In pass from apex to fully crowded, increase this value.
	Rake Out Before Apex	If the finished surface is below grade when you perform a Rake Out pass from fully crowded to the apex, increase this value.
	Rake Out After Apex	If the finished surface is below grade when you perform a Rake Out pass from the apex to full reach, increase

Type	Option	Description
		this value.
Flat Attachment In	Flat Attachment In (Boom) Before Apex	If the finished surface is below grade when you perform a Flat Attachment In pass from full reach to the apex, increase this value. This will control the boom raise and lower commands.
	Flat Attachment In (Boom) After Apex	If the finished surface is below grade when you perform a Flat Attachment In pass from the apex to fully crowded, increase this value. This will control the boom raise and lower commands.
	Flat Attachment In (Attachment) Before Apex	If the attachment changes angle too slowly and does not keep flat on grade when you perform a Flat Attachment In pass from full reach to the apex, increase this value.
	Flat Attachment In (Attachment) After Apex	If the attachment changes angle too slowly and does not keep flat on grade when you perform a Flat Attachment In pass from the apex to fully crowded, increase this value.
Flat Attachment Out	Flat Attachment Out (Boom) Before Apex	If the finished surface is below grade when you perform a Flat Attachment Out pass from fully crowded to the apex, increase this value. This will control the boom raise and lower commands.
	Flat Attachment Out (Boom) After Apex	If the attachment changes angle too slowly and does not keep flat on grade when you perform a Flat Attachment Out pass from the apex to full reach, increase this value. This will control the boom raise and lower commands.
	Flat Attachment Out (Attachment) Before Apex	If the attachment changes angle too slowly and does not keep flat on grade when you perform a Flat Attachment Out pass from fully crowded to the apex, increase this value.

Type	Option	Description
	Flat Attachment Out (Attachment) After Apex	If the attachment changes angle too slowly and does not keep flat on grade when you perform a Flat Attachment Out pass from the apex to full reach, increase this value.
Boom	Raise Speed	Looking at the surface from full reach to the apex, use Boom Raise Speed to make the attachment cut to grade. If the finished surface is consistently below grade, increase this value.
	Raise Response	If the boom is slow to rise, then increase this value.
	Lower Speed	Looking at the surface from the apex to fully crowded, use Boom Lower Speed to make the attachment cut to grade. If the finished surface is consistently above grade, increase this value.
	Lower Response	If the boom is slow to lower, then increase this value.
	Take Off Speed	If the boom is not driving to grade within the first 0.5 m/1.5 ft after the stick is pulled, increase this value. Decreasing this value may reduce oscillations at the very beginning of the pass.
Joystick	Joystick Response Speed	If both the boom and attachment are slow to respond to stick movement, increase this value. Decreasing this value may reduce oscillations at the very beginning of the pass and oscillations observed when the stick movement is slow.
Attachment	Dump Speed	If the attachment is slow to dump for the full duration of the pass, increase this value.
	Dump Response	If the attachment is slow to dump, then increase this value.

Type	Option	Description
	Curl Speed	If the attachment is slow to curl for the full duration of the pass, increase this value.
	Curl Response	If the attachment is slow to curl, then increase this value.
	Tilt Speed	If the attachment is slow to tilt, increase this value.
	Tilt Sensitivity	If the automatic tilt adjustment is erratic or jerky, decrease this value.

5. Tap Apply.
6. Make another test pass and compare the results. Repeat the process, if necessary, until you get the results you desire.

   You may need to enlist the help of your technician for further fine tuning and a precise check of the machine measure-up.

7.6 Best Practices When Using Tilt Autos

Note – For Trimble Autos on Cat NGH series 07 machines or Cat NGH mini/micro machines, see Appendix B, Using Autos on other machine models.

Observe the following best practices to obtain optimal results when using Tilt Autos.

WARNING — When Tilt Autos is engaged, the system will control movement of the attachment tilt. These movements could cause injury to anyone near the attachment, or damage to the machine. Always put the attachment on the ground and engage the hydraulic lockout before you leave the machine.
Do not use Tilt Autos when somebody is working near the attachment or if the ground conditions are unstable. Only use Tilt Autos to grade a finish surface.
Disarm Tilt Autos when you perform other applications, such as lifting.

TIP – When using Autos features, avoid connecting the Operator App device to the system via Wi-Fi. Ensure that you use a wired connection.

7.6.1 Prepare the machine

Before you use Tilt Autos, your technician or installer should check that:

- The machine is in good operating condition.
- None of the connecting pins (boom, stick, attachment and cylinders) have excessive wear. If the machine is loose, the system cannot produce optimal results.

- The measure-up and calibration of the machine is accurate. The surface you build cannot be better than the accuracy of these measurements and calibrations.
- A valve calibration has been performed.

7.6.2 Best practices for operating excavators

Tilt Autos performs best when grading a finish surface.

If applicable, after the valve is calibrated, avoid changing settings on the tiltrotator controller. This may affect performance and require the valve to be recalibrated.

Procedures to perform every time you use Tilt Autos

- Position the machine on solid, stable ground to prevent rocking.
  Rocking negatively affects the performance of Tilt Autos. It is important that both excavator tracks are firmly planted on stable ground. It is not essential that the ground is flat (a sloping surface is okay).

> TIP – If the attachment becomes unstable due to machine rocking, stop and wait until the attachment becomes stable before you try again. If the problem persists, prepare the ground that the machine tracks will sit on. Both tracks should sit on stable ground.

- Make sure the machine's hydraulic oil reaches its normal operating temperature (55°C/130°F).
- Turn the throttle up to maximum revs.
- Position the attachment within the control range.

> TIP – Use the lightbars, cut/fills and buzzer to guide the attachment.

- If applicable, make sure the following features are disabled before you use Tilt Autos:
  - Crane/heavy lift mode
  - Smart boom
- Enable the Auto function on the tiltrotator controller before you try to arm Tilt Autos.

Procedures to perform every time you change the attachment

- Check that a precise measure-up has been done for the attachment.
  - If you have an Operator Plus account you can create and edit attachments via the Advanced button on the Edit Attachment screen.
  - If you have an Operator account and it is a new attachment, your technician or dealer must enter the measure-up in the Web Interface before you can select it in the Attachments screen.

- Check the performance of Tilt Autos every time you change from one attachment to another, especially if you are going from a large heavy attachment to a smaller one or vice-versa.

  If necessary, adjust the Tilt Speed slider in the Autos Optimization screen. This may optimize the performance of Tilt Autos.

Procedures to perform, as required

- Update the cutting edge length to account for the wear of the attachment. If required, update the value in the Edit Attachment screen.

  If the cutting edge has worn unevenly, use an average value. However, guidance is never better than the range of differences in wear.

  Note – The frequency at which you need to check the cutting edge length depends on factors such as the type of material you work with and the durability of the cutting edge.

- If necessary, adjust the Tilt Speed slider in the Autos Optimization screen. This may optimize the performance of Tilt Autos.

  An example of when you might need to adjust this value is when material conditions change.

Operating practices that can improve performance

- Minimize slew on steep slopes when you press and hold the Grade Enable switch. A small horizontal change can make a large vertical difference.
- To improve grading performance when material conditions change, adjust the velocity of the boom and/or stick movement, especially when you first initiate Tilt Autos.
- To achieve the best results, leave the surface a little high before you make the final pass. The attachment is more stable while it is resting on material versus in the air.
- To avoid under or over-cutting at the start of a pass, allow the attachment to snap to design slope before increasing stick velocity.
- When approaching changes in design grade, it is best to reduce stick speed and align the bucket tips to the design break-line.
- It is best to avoid straddling changes in design grade by working along/across the design changes and/or adjusting the vertical guidance point location (located in the Work Setting > Attachments menu).
- Slow down the rotation speed if Tilt Autos is not staying on grade during rotation movement, especially when it is in the rake position.

  You can slow rotation speed manually or if it is an on-going problem, try changing the tiltrotator rotation speed. After you have done this, re-tune the tilt speed in the Autos Optimization screen.
- Tilt Autos can be engaged when the bucket is pointing towards the cab (0°) or away from the cab (180°). If you use Tilt Autos only (not in combination with Depth Autos), then Tilt Autos has an operational window of ±70° from either of these working

positions.

Note – This does not apply if you have an engcon tiltrotator with protocol ePS 2.0.

- Tilt Autos performs best when the tilt cylinders are perpendicular to the working surface.
- On some design slopes, it may not be possible for Tilt Autos to reach grade within the tilt cylinder extents. If this occurs, you may need to reposition the bucket and/or machine.

8

Mapping

In this chapter:

- Mapping

This chapter introduces the use of mapping. Mapping provides a location-oriented record of machine activity and site information.

8.1 Mapping

Note – Mapping and the features mapping offers are configurable in the Web Interface by your technician. In addition, advanced mapping features may only be available if the correct license is installed. If mapping or a mapping feature is not available on your system, contact your technician or dealer.

Mapping data is:

- The cutting edge elevation recorded as the machine works. This is called Latest Pass mapping; OR
- The cutting edge elevation recorded for a particular location, only if the measured elevation is less than the previously recorded elevation. This is called Minimum Elevation mapping.

You can also optionally:

- Display the cut/fill differences between the recorded map data and the guidance surface.
- Display an initial map generated from the cut/fill differences between a pre-mapped surface, called a ground surface, and the guidance surface.

  For example, if the ground surface is based on a survey of the original site, then the initial map could enable you to move dirt around the site more efficiently.

  Note – The ability to select a ground surface is a licensed feature. Contact your dealer for more information.

8.1.1 Using mapping

The following systems support mapping:

- Systems with GS5x0 sensors on the front linkage
- Caterpillar Cat Grade Control E and F Series Excavators
- Caterpillar Build 07 Series Excavators

Mapping is available when you have an office or in-field design loaded.

The shortcut key

When you are in the work screen, you can use one of the following shortcut keys to turn the display of cut/fill mapping data on and off:

- If Latest Pass mapping is selected, is displayed.
- If Minimum Elevation mapping is selected, is displayed.

You can also touch and hold the shortcut key to open the Cut/Fill Mapping screen.

Mapping rules

Mapping data is collected when the following conditions are met:

- Autos is in the engaged (green) state, *OR*
- The bucket is within 1 m (39 ½ inches) above design or any distance below design, *AND*

  For systems with a non-rotating bucket, the bucket is moving towards the cab and is positioned for cutting.

  For systems with a rotating bucket:
  - The bucket is moving towards the cab and is rotated ± 90° from 0°.
  - The bucket is moving away from the cab and is rotated ± 90° from 180°.

8.1.2 Start mapping with an empty map

To start mapping with an empty map:

1. From the Work Settings menu open the Cut/Fill Mapping screen, or touch and hold or in the shortcut bar.
2. Optionally, toggle Display Mapping Data on or off.
3. Optionally, select a Mapping Mode of Latest Pass or Minimum Elevation.
4. If available, from the Ground Surface drop down, select None.
5. Tap Apply.

ATTENTION – Changing the Ground Surface setting deletes any existing mapping data stored on the machine.

8.1.3 Start mapping with a pre-mapped surface

Note – The ability to select a ground surface is a licensed feature. Contact your dealer for more information.

To start mapping with a pre-mapped surface:

1. Transfer a ground surface .ttm file onto the machine. Either sync with Connected Community or import the ground surface file from a USB flash drive.

   Note – If a Connected Community sync adds a new ground surface .ttm file to the current project, then a notification is displayed.

   Note – To import a ground surface .ttm file from a USB flash drive, the ground surface file must be in the ProjectLibrary \ Projects \ [project name] \ OfficeData folder on your USB flash drive.
2. From the Work Settings menu open the Cut/Fill Mapping screen, or touch and hold or in the shortcut bar.

3. Optionally, toggle Display Mapping Data on or off.
4. From the Ground Surface drop down, select the ground surface file to load.
5. Optionally, select a Mapping Mode.
6. Tap Apply. If Display Mapping Data is on, a cut/fill map is generated showing the difference between:
   - The guidance surface of the currently loaded design; and
   - The ground surface

   Note – If Lane Guidance is selected, then the cut/fill map generates using the lane guidance surface. In this case, cut/fill data is only displayed within 20 m (65 ft) of the machine.

ATTENTION – Changing the Ground Surface setting deletes any existing mapping data stored on the machine.

As you work, the pre-mapped ground surface elevations are overwritten by the measured elevations.

If you select a different design within the same project, the cut/fill map regenerates using the new design.

8.1.4 Downloading ground surface data from an online source

If your technician has enabled access, you can request the system to download the latest ground surface data in a .ttm file from an online source. This includes data from other machines on the site.

This option downloads data once when requested.

1. On the Cut/Fill Mapping screen, set the *Ground Surface* field to WorksOS download.
2. Tap Apply.

Downloading information for a large area can take a while.

Note – This feature requires an Advanced Mapping license. A machine can only download ground surface data for a compatible design.

8.1.5 Deleting map data

To delete any existing mapping data stored on the machine:

1. From the Work Settings menu open the Cut/Fill Mapping screen, or touch and hold or in the shortcut bar.
2. Tap Reset Map.

If a pre-mapped surface was initially loaded and Display Mapping Data is on, then the cut/fill map of the differences between the design surface and the pre-mapped surface is reset to its original state.

8.1.6 Inspecting a map

To view details of the mapping data on a plan view, touch-and-hold on an onscreen location where mapping data is recorded. Select Inspect Map from the context menu.

8.1.7 The work screen

Work screen items that affect the recording and display of mapping information are described in the following sections.

The guidance bar

The target icons relevant to Mapping are shown below:

Vertical elevation offset	Perpendicular elevation offset

Note – Either the vertical elevation offset or *perpendicular elevation offset icon appears, depending on which offset type is in use.*

Use the offset icons in the following ways:

- Tap to cycle through the configured offset memories.
- Touch and hold to access the respective offset configuration screens.

The guidance view

The guidance view displays the machine relative to the surface being worked. You can set up to three different views to display mapping data at once:

- Cross-section
- Profile
- Plan

Note – Mapping data is not visible in the 3D view.

Mapping data is displayed in the following way:

Color	Meaning
Shades of red	The shaded area is above the working surface elevation (cut).
Shades of green	The shaded area is within on-grade tolerance of the working surface elevation (on-grade).
Shades of blue	The shaded area is below the working surface elevation (fill).
Gray	Cut/fill values are being calculated and loaded.

System Settings

The System Settings icon is in the lower left-hand side of the work screen:

Use System Settings to access and configure various functions, including (but not limited to):

- Grade Tolerance
- File Transfer

The shortcut bar

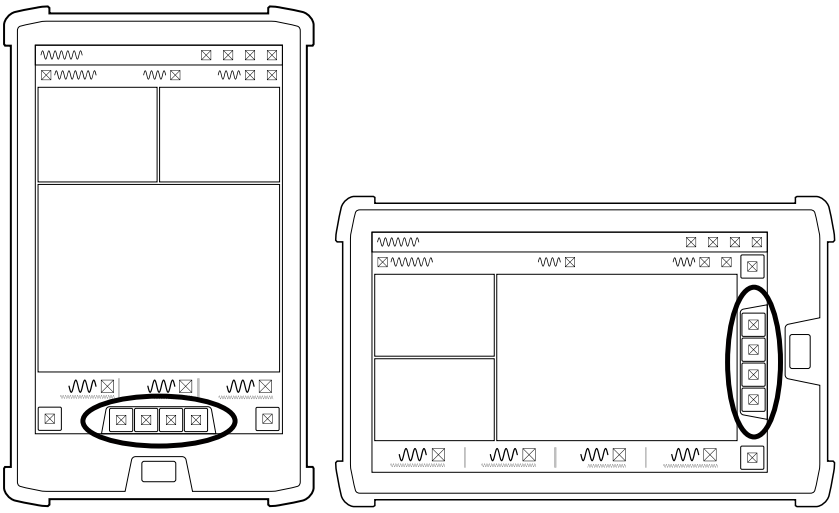

The shortcut bar enables you to easily perform frequently repeated tasks. The shortcut icons for mapping are:

- (Latest Pass), or;
- (Minimum Elevation)

To display or hide mapping data, tap the mapping icon in the shortcut bar.

To open the Cut/Fill Mapping settings screen, touch and hold the mapping icon.

Work Settings menu

The Work Settings icon is in the lower right-hand side of the work screen:

Use the Work Settings menu to access and configure those settings that change according to the requirements of each individual task, including (but not limited to):

- Cut/Fill Mapping
- Elevation Offset

8.1.8 For more information

See the following chapters:

- 1.6 Transferring Files
- 4.2 Using Elevation Offsets

8.1.9 Troubleshooting

The table below lists some of the error messages that may appear when you use mapping.

Error Message	Possible cause(s)
Unable To Load Cut/Fill Map	• Suspect a corruption of the mapping database, or a corruption of a ground surface file. • Otherwise, suspect a system state issue, and restart the system.

9

Avoidance Zones

In this chapter:

- Avoidance Zones

This chapter introduces the use of avoidance zones.

9.1 Avoidance Zones

WARNING — Entering an avoidance zone could cause personal injury or damage to the machine. Always be aware of nearby avoidance zones when operating a machine.

WARNING — You are responsible for observing safe operating practices. This product does not guarantee error-free avoidance zone guidance.

Avoidance zones indicate areas on a site that machines need to avoid. They appear as solid magenta shapes on the site plan and at the current machine elevation.

Avoidance zones display as horizontal boundaries that do not describe objects such as pipes or overhead wires.

Avoidance zones are available on machines with

- an applied project that has an avoidance file loaded into it
- 3D positioning sources only

Avoidance zone files are added to project files by the office or your technician.

Projects must be applied and include an avoidance zone file for the avoidance zones to display.

9.1.1 Avoidance zone icons

Applied projects that have avoidance zones (supplied by the office) can display the following icons:

Note – You can continue working when any of these icons display. These icons are for information only.

Icon	Meaning	Action
	Project includes an avoidance file	Continue working
	Avoidance file cannot be loaded Avoidance file has too many edges	Continue working and notify your technician

	The avoidance file requires a 3D positioning source Some machine measurements are not configured	Continue working and notify your technician

9.1.2 The work screen

Applied projects that have avoidance zones (supplied by the office) can display the following border colors on the work screen:

Indicators	State	Machine proximity to zone
Blue border	Zone detected	The machine is approaching the avoidance zone but is still outside the warning perimeter.
Orange border Audible beep	Zone warning distance	The machine is within the warning perimeter of 8 m minimum, configurable in the Web Interface.
Magenta border Continuous audible beep	Zone breached	The machine is in the avoidance zone.

Note – When a machine breaches an avoidance zone, full guidance continues.

WARNING — When an attachment is fully curled in, the stick may extend into an avoidance zone before the breach is reported on screen and audibly.

9.1.3 Machine boundary

The machine boundary is the magenta outline around the machine.

To show or hide the machine boundary outline, use the Machine Boundary toggle on the Overlays screen.

9.1.4 Troubleshooting

The table below lists an error message that may appear when working with avoidance zones.

Error Message	Possible cause(s)	Action
Avoidance Zone Proximity and Guidance Lost	Machine orientation is unknown.	Identify the avoidance zone on the site and move or rotate the machine away from the avoidance zone.

10

Viewing third party apps

In this chapter:

- Viewing the Payload Management app

This chapter introduces the use of custom views in the work screen to view third party applications.

10.1 Viewing the Payload Management app

In the work screen, you can view third party applications such as the Payload Management for Earthworks app. For instructions on how to operate the weighing system, refer to the Payload Management for Earthworks User Manual.

Note – Viewing the app is only supported on a TD520 device.

TIP – If you have trouble viewing the app, go to the Licenses tile and ensure that there is a payload management license installed. Your technician can install this license via the Web Interface.

To configure payload management to appear in one of the screen views:

1. Ensure the Payload Management app is running on the TD520.
2. Ensure that the Earthworks app is run in the foreground and that the payload management app is run in the background.
3. From the System Settings menu , select Layout.
4. In the Layout screen, select which view to display the Payload Management app in. Each view has a drop-down list of the available options.
5. Select Loadrite and tap Done.

Alternatively:

1. Ensure the Payload Management app is running on the TD520.
2. Ensure that the Earthworks app is run in the foreground and that the Payload Management app is run in the background.
3. Touch and hold anywhere in the work screen.
4. From the pop-up menu, select Layout. The screen layout displays graphically.
5. Select the view to display the Payload Management app in and tap the Loadrite icon .
6. Tap Done.

A

Remote Switch and Joystick Switches on other machine models

In this chapter:

- Joystick Switches and Remote Switch on Cat NGH mini/micro machines
- Joystick Switches for Trimble Autos on Cat NGH series 07 machines

This section describes how joystick switches and remote switches on Cat NGH mini/micro machines and Trimble Autos on Cat NGH series 07 machines integrate with the system allowing you to perform common features such as Autos.

Note – For other machines, see 1.2 Remote Switch.

A.1 Joystick Switches and Remote Switch on Cat NGH mini/micro machines

Depending on your installation, the Autos switch can be configured via:

- The factory standard joystick
- Certain third party joysticks
  Note – Ask your technician which switch has been configured for Autos.

A.1.1 Factory Standard Joystick Switch

The integrated Grade Auto switch on your left joystick allows you to engage Depth and/or Tilt Autos.

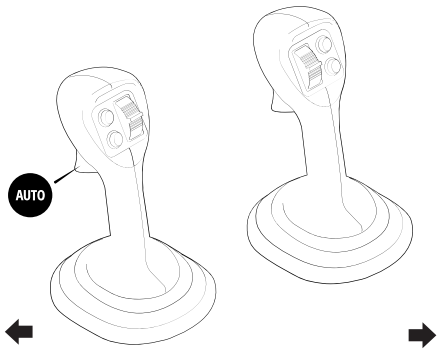

A.1.2 Remote Switch

CAUTION — Avoid installing the remote switch on a Cat NGH mini/micro excavator with the factory standard joysticks. The weight of the module can cause the joystick to tip, which can lead to unintended machine movement.

The remote switch lets you use common features while keeping your hands close to the machine controls. The remote switch only functions when you are in the work screen. The functionality of the remote switch depends on the mode you are in.

A.1.3 Depth and Slope mode functionality

For Depth and Slope mode, the remote switch lets you:

- Select the attachment focus (❹)
  Each button press will cycle the attachment focus from Left to Right
- Increase (❶) or decrease (❷) the elevation offset
- Bench elevation (❸)

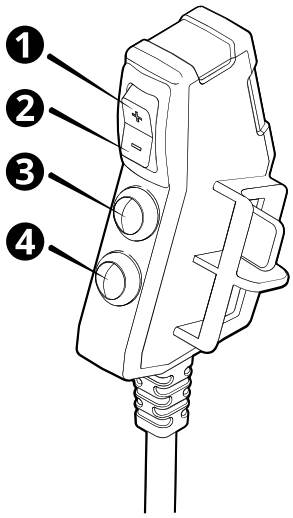

❶	Increment elevation offset switch	❷	Decrement elevation offset switch	❸	Bench elevation switch
❹	Attachment focus switch				

A.1.4 Design mode functionality

For Design mode, the remote switch lets you:

- Select the attachment focus (❹)
  Each button press will cycle the attachment focus from Left to Right
- Increase (❶) or decrease (❷) the elevation offset
- Record point (❸)

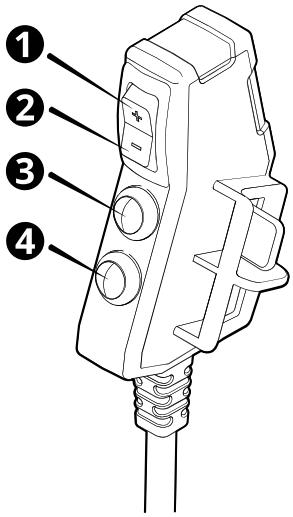

❶	Increment elevation offset switch	❷	Decrement elevation offset switch	❸	Record point switch
❹	Attachment focus switch				

A.2 Joystick Switches for Trimble Autos on Cat NGH series 07 machines

You can configure the switches on your factory standard joystick or aftermarket joystick via the Cat Machine Display. For more information, refer to the *Operation and Maintenance Manual* for your machine.

Note – The activation mode you select for Autos via the Cat Machine Display will determine how Autos engages. This may be Assist on Demand or Toggle Autos. For more information on how to use Autos, see these guides in the overflow menu:

- Depth Autos Setup, Tilt Autos Setup, or Both
- Depth Autos Setup, Tilt Autos Setup with a Non-Integrated Tiltrotator, or Both

B

Using Autos on other machine models

In this chapter:

- Depth Autos Setup, Tilt Autos Setup, or Both – Trimble Autos on Cat NGH series 07 machines
- Depth Autos Optimization, Tilt Autos Optimization, or Both – Trimble Autos on Cat NGH series 07 machines
- Depth Autos Setup, Tilt Autos Setup with a Non-Integrated Tiltrotator, or Both – Trimble Autos on Cat NGH series 07 machines
- Depth Autos Optimization, Tilt Autos Optimization with a Non-Integrated Tiltrotator, or Both – Trimble Autos on Cat NGH series 07 machines
- Best Practices When Using Depth Autos – Trimble Autos on Cat NGH series 07 machines
- Best Practices When Using Tilt Autos – Trimble Autos on Cat NGH series 07 machines
- Depth Autos Setup on Cat NGH mini/micro machines
- Depth Autos Optimization on Cat NGH mini/micro machines
- Tilt Autos Setup on Cat NGH mini/micro machines
- Tilt Autos Optimization on Cat NGH mini/micro machines
- Depth and Tilt Autos Setup on Cat NGH mini/micro machines
- Depth and Tilt Autos Optimization on Cat NGH mini/micro machines
- Best Practices When Using Depth Autos on Cat NGH mini/micro machines
- Best Practices When Using Tilt Autos on Cat NGH mini/micro machines

This section describes the use of automatic controls on Trimble Autos for Cat NGH machines and Cat NGH mini/micro machines.

Note – For other machines, see 7.4 Depth and Tilt Autos Setup and 7.5 Depth and Tilt Autos Optimization.

B.1 Depth Autos Setup, Tilt Autos Setup, or Both – Trimble Autos on Cat NGH series 07 machines

This information applies to Trimble Autos on Cat NGH series 07 machines

For Tilt Autos, the following information is relevant for a tilt bucket, tilting hitch or an integrated tiltrotator. For a non-integrated tiltrotator, see B.3 Depth Autos Setup, Tilt Autos Setup with a Non-Integrated Tiltrotator, or Both – Trimble Autos on Cat NGH series 07 machines.

TIP – When using Autos features, avoid connecting the Operator App device to the system via Wi-Fi. Ensure that you use a wired connection.

Autos performs best when grading a finish surface. After you finish bulk excavating and approach final grade, engage Autos.

Autos mode	What the system automatically controls
Depth Autos	The system automatically controls movement of the boom and attachment curl, while you manually control movement of the stick.
Tilt Autos	The system automatically controls movement of the attachment tilt, while you manually control movement of the rest of the front linkage.
Depth and Tilt Autos	The system automatically controls movement of the boom and attachment tilt and curl, while you manually control movement of the stick.

Note – Use Autos with a bucket, do not use it with any other type of attachment.

TIP – For information on best practices, see *6.3 Best Practices When Using Depth Autos* and *7.6 Best Practices When Using Tilt Autos*.

B.1.1 Autos status indicators

The Autos status indicators at the bottom left (Tilt) and right–hand corner (Depth) of the work screen show you what state Autos are currently in.

Status indicator	Status
	Manual Autos is enabled, but not engaged.

Status indicator	Status
	Manual interlock Autos is enabled but cannot be engaged. Possible reasons: Hydraulic lockout engaged, other menus or apps are obscuring the Autos icon.
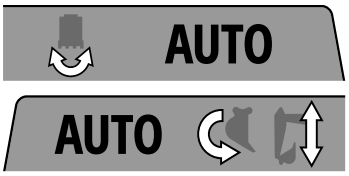	*Autos ready* Autos is enabled and engaged, but is not active because the attachment is outside the control range.
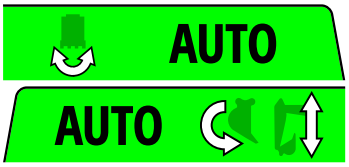	*Autos engaged* Autos is enabled, engaged and active with the attachment inside the control range. In this state the system controls movement of the boom and attachment.
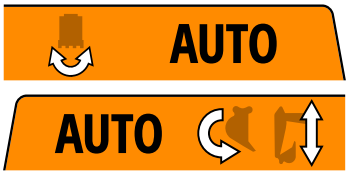	*Autos not ready* Autos is enabled and engaged but cannot be active so Autos is temporarily suspended. Possible reason: GNSS precision is outside tolerance.

B.1.2 Enable and Engage Autos

WARNING — When Depth and Tilt Autos is engaged, the system will control movement of the boom and attachment. These movements could cause injury to anyone near the attachment, or damage to the machine. Always put the attachment on the ground and engage the hydraulic lockout before you leave the machine.
Do not use Depth and Tilt Autos when somebody is working near the attachment or if the ground conditions are unstable. Only use Depth and Tilt Autos to grade a finish surface. Disarm Depth and Tilt Autos when you perform other applications, such as lifting.

To use Depth Autos, Tilt Autos or both:

1. If you are in Depth and Slope mode, bench the machine before you use Autos.
   If you are in Design mode, load a design before you use Autos.
2. Position the machine on solid, stable ground to prevent rocking.
3. Make sure the machine's hydraulic oil reaches its normal operating temperature.
4. Select High Power mode and turn the throttle up to maximum revs.
   Note – It is okay to use the auto idle function on your machine.

5. Position the attachment within the control range.

TIP – Use the lightbars, cut/fills and buzzer to guide the attachment.

6. On the Cat Machine Display, configure the joystick buttons. This is a one-off setup task and will depend on the activation mode you select for Autos. This may be Assist on Demand or Toggle Autos.

   There may be applications where you want Autos functionality without having to use stick in or out joystick input. An example would be holding grade while slewing the machine with the attachment rotated at 90 degrees. In these situations, set the Autos mode to Assist on Demand.

Autos activation mode	Assign Autos to joystick button
Assist on Demand	a. If required, assign Grade Activation (Depth Autos) to a joystick button via the Cat Machine Display. b. If required, assign Tilt Activation (Tilt Autos) to a joystick button via the Cat Machine Display. c. Assign Assist On Demand to a joystick button via the Cat Machine Display.
Toggle Autos	a. If required, assign Grade Activation (Depth Autos) to a joystick button via the Cat Machine Display. b. If required, assign Tilt Activation (Tilt Autos) to a joystick button via the Cat Machine Display.

7. Enable Autos: Toggle on Grade Assist and/or Tilt Assist, either via the Cat Machine Display or the joystick buttons.
8. Engage Autos.

Autos activation mode	Instructions to engage Autos
Assist on Demand	Press and hold the Assist on Demand button as the attachment cutting edge approaches the design elevation. If the attachment is in the controls range it will start the automatic movement of the boom and/or attachment.
Toggle Autos	If the attachment is in the controls range and you move the stick it will start the automatic movement of the boom and attachment. Move the stick lever slowly to start the automatic movement of the boom. Once the attachment engages with

Autos activation mode	Instructions to engage Autos
	the design and Autos engages and the boom is in motion, you can increase the velocity of the stick. 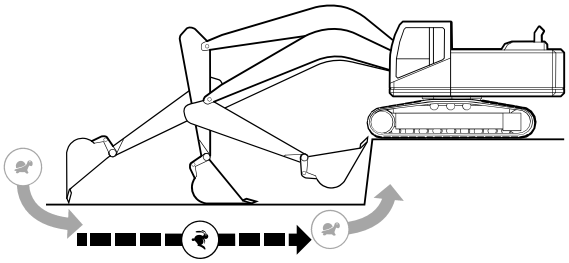

To temporarily disengage and re-engage Autos:

Autos activation mode	Instruction to disengage and re-engage Autos
Assist on Demand	Let go of the Assist on Demand button. Press and hold the Assist on Demand button again to re-engage Autos.
Toggle Autos	– Stop moving the stick. Move the stick again to re-engage Autos. OR – Toggle Autos off via the Grade and/or Tilt Activation button. Toggle the Grade and/or Tilt Activation button again to re-engage Autos.

Be aware that while Autos is disengaged you can cut beneath the design. Sometimes you may purposefully want to dig below design, however if this is not the case make sure that you monitor your cut/fills and lightbars.

You can manually override Autos at any time by moving the boom or attachment.

Select and Apply a Preset

You can select and apply the active preset via the Autos Setup or Autos Optimization screen. You can access these screens via the Work Settings menu. There is always at least one preset stored which is the Default preset set by your technician in the Web Interface. This cannot be edited or deleted.

Select the active preset that you require and tap Apply.

You can create, edit or delete a preset via the Autos Optimization screen. For more information, see B.2 Depth Autos Optimization, Tilt Autos Optimization, or Both – Trimble Autos on Cat NGH series 07 machines.

B.1.3 Troubleshooting

The table below lists some of the error messages that may appear when you use Autos. You may need to enlist the help of your technician to resolve the error states.

Error Message	Possible cause(s)
Auto State Not Visible	Suspect that: • Other menus or apps are obscuring the Autos icon. • You have Assist on Demand assigned to a joystick button, and have not enabled Tilt Assist or Grade Assist. • Valve calibration has not been completed. • Machine ECM does not currently support Autos. Missing Software Enabled Attachment or required license.
Machine Control System Error	Check the machine display for faults.

If you use the Cat Machine Display to change the direction of flow on a tilt attachment (changing from Normal to Reverse, or from Reverse to Normal), you must repeat the attachment measure-up process on the Cat Machine Display. Failure to do so may produce incorrect Tilt Autos performance.

If the joystick button that is assigned to Grade Assist (Depth Autos) on the Cat Machine Display is not working, assign Grade Assist (Depth Autos) to a new button or re-assign it to the original button.

B.2 Depth Autos Optimization, Tilt Autos Optimization, or Both – Trimble Autos on Cat NGH series 07 machines

This information applies to Trimble Autos on Cat NGH series 07 machines

For Tilt Autos, the following information is relevant for a tilt bucket, tilting hitch or an integrated tiltrotator. For a non-integrated tiltrotator, see B.4 Depth Autos Optimization, Tilt Autos Optimization with a Non-Integrated Tiltrotator, or Both – Trimble Autos on Cat NGH series 07 machines.

TIP – For information on how to use Autos, see *B.1 Depth Autos Setup, Tilt Autos Setup, or Both – Trimble Autos on Cat NGH series 07 machines*.

B.2.1 Presets

Presets allow you to save Autos Optimization settings so that you can restore them later. This is useful when there is a change in application or material.

Note – Presets are not dependent on the Auto mode selected. For example, if you create Preset 1 while in Depth and Tilt mode, the same boom and attachment speeds will appear if you select Preset 1 while in Depth mode and the same tilt speed will appear if you select Preset 1 while in Tilt mode.

Select and Apply a Preset

You can select and apply the active preset via the Autos Setup or Autos Optimization screen. You can access these screens via the Work Settings menu. There is always at least one preset stored which is the Default preset set by your technician in the Web Interface. This cannot be edited or deleted.

Select the active preset that you require and tap Apply.

Add a new preset

Note – When you add a new preset the Autos Optimization sliders are set to their default values.

1. In the Autos Optimization screen, tap Create. The Add New Preset screen opens.
2. Tap inside the *Preset Name* field and enter a descriptive name for the preset.
3. Tap Apply. You are returned to the Autos Optimization screen.
4. In the Autos Optimization screen, use the Autos sliders or the arrows to increase (▲) or decrease (▼) the values. For more information, see the section on optimizing the Autos performance.
5. The preset changes to a customized or temporary state (as indicated by the * next to the preset name and the italicized text).
6. Tap Apply to save the preset in its customized state.

   Note – All changes will be discarded if you select the original unmodified preset or a different preset. To save the customized preset permanently, tap Save As. See Save an edited preset with a new name.

Edit a preset

Note – If you try to switch to another preset while editing, the Discard All Changes? *confirmation message appears. Any unsaved changes you made will be lost if you tap Yes.*

1. In the Autos Optimization screen, select and apply a preset.
2. Use the Autos sliders or the arrows to increase (▲) or decrease (▼) any of the values.

   Any edit you make to a preset puts it into a customized and temporary state (as indicated by the * next to the preset name and the italicized text) .
3. To save the changes, tap Save As. The Save Preset As screen opens.
4. Turn on the Replace Existing slider. It will auto populate the Preset Name field with the name of the active preset. Tap Apply. You are returned to the Autos Optimization screen. The Preset Overwritten notification message appears.

TIP - To save the customized preset with a new name, see Save an edited preset with a new name.

Save an edited preset with a new name

Any active preset that is in a customized and temporary state (as indicated by the * next to the preset name and the italicized text) can be permanently saved as a new preset with a different name.

1. In the Autos Optimization screen, tap Save As. The Save Preset As screen opens.
2. Tap inside the *Preset Name* field and enter a descriptive name for the preset.
3. Tap Apply. You are returned to the Autos Optimization screen. The Preset Saved Successfully notification message appears.

TIP - If you turn on the Replace Existing slider, it will auto populate the Preset Name field with the name of the active preset. Tap Apply. You are returned to the Autos Optimization screen. The Preset Overwritten notification message appears.

Delete a preset

Note – You cannot delete the Default preset.

1. In the Autos Optimization screen, select a preset and tap the delete icon (🗑) on the right-hand side of the preset.
2. A Delete confirmation message appears.
3. Tap Yes to confirm the deletion.

B.2.2 Optimize the Depth and Tilt Autos performance

Note – Check that your technician has calibrated Autos before you try to adjust the values in the Autos Optimization screen.

You may need to adjust the Autos Optimization settings when, for example, you work with a different type of material (such as sand, dirt, or gravel).

Adjusting the settings in the Autos Optimization screen may improve the performance of Autos. For example, if the boom is overshooting above the target design grade when you pull in the stick, you can decrease the Boom Raise speed.

Autos performance is dependent on the speed that you pull in the stick. Experiment with different speeds to find the optimum for your machine and combination of attachment and material. For example:

- A slower or faster speed may produce a better result.
- A smooth take off speed helps.
- Do not vary the speed while optimizing the sliders.

1. Select High Power mode and turn the throttle up to maximum revs.
2. Using Depth and Tilt Autos, make a test pass in the material you are working, so that you can judge the current performance of Autos.
   a. Place the attachment on grade at near full reach.
   b. Engage Autos.
   c. Watch how quickly or slowly the attachment moves to the on-grade position.

   Note – The behavior of Autos when the attachment is not loaded with the same material you will work with does not provide enough information to adjust the values in the Autos Optimization screen. Always use this information in conjunction with the results of a test pass.
3. To make any changes, in the Autos Optimization screen, select the appropriate type from the Optimize drop-down list.
4. Move the slider(s) to increase or decrease the values for the following:

TIP – The apex is where the boom changes from raising to lowering during a pass.

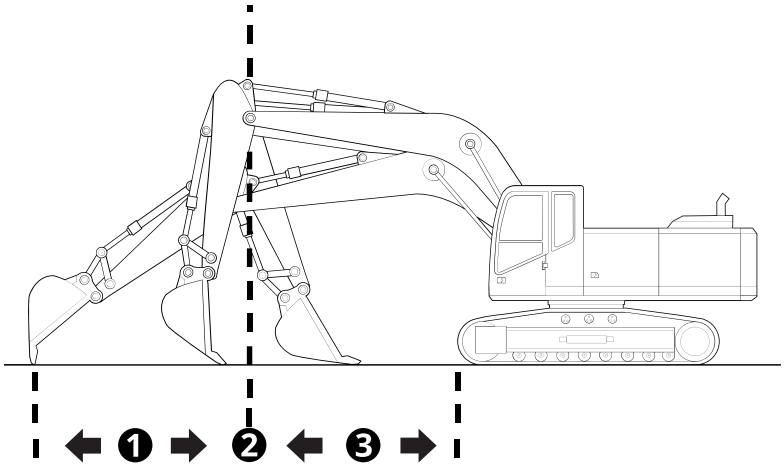

❶ Full reach to apex ❷ Apex ❸ Apex to fully crowded

Type	Option	Description
Attack Angle	Attack Angle	If required, move the Attack Angle slider to change the angle of the bottom of the attachment to the design surface. Zero is parallel, a negative value will lower the back of the attachment and a positive value will raise the back of the attachment.
Rake	Rake In Before Apex	If the finished surface is below grade when you perform a Rake In pass from full reach to the apex, increase this value.
	Rake In After Apex	If the finished surface is below grade when you perform a Rake In pass from apex to fully crowded, increase this value.
	Rake Out Before Apex	If the finished surface is below grade when you perform a Rake Out pass from fully crowded to the apex, increase this value.
	Rake Out After Apex	If the finished surface is below grade when you perform a Rake Out pass from the apex to full reach, increase this value.
Flat Attachment In	Flat Attachment In (Boom) Before Apex	If the finished surface is below grade when you perform a Flat Attachment In pass from full reach to the apex, increase this value. This will control the boom raise and lower commands.
	Flat Attachment In (Boom) After Apex	If the finished surface is below grade when you perform a Flat Attachment In pass from the apex to fully crowded, increase this value. This will control the boom raise and lower commands.
	Flat Attachment In (Attachment) Before	If the attachment changes angle too slowly and does not keep flat on grade

Type	Option	Description
	Apex	when you perform a Flat Attachment In pass from full reach to the apex, increase this value.
	Flat Attachment In (Attachment) After Apex	If the attachment changes angle too slowly and does not keep flat on grade when you perform a Flat Attachment In pass from the apex to fully crowded, increase this value.
Flat Attachment Out	Flat Attachment Out (Boom) Before Apex	If the finished surface is below grade when you perform a Flat Attachment Out pass from fully crowded to the apex, increase this value. This will control the boom raise and lower commands.
	Flat Attachment Out (Boom) After Apex	If the attachment changes angle too slowly and does not keep flat on grade when you perform a Flat Attachment Out pass from the apex to full reach, increase this value. This will control the boom raise and lower commands.
	Flat Attachment Out (Attachment) Before Apex	If the attachment changes angle too slowly and does not keep flat on grade when you perform a Flat Attachment Out pass from fully crowded to the apex, increase this value.
	Flat Attachment Out (Attachment) After Apex	If the attachment changes angle too slowly and does not keep flat on grade when you perform a Flat Attachment Out pass from the apex to full reach, increase this value.
Boom	Raise Speed	Looking at the surface from full reach to the apex, use Boom Raise Speed to make the attachment cut to grade. If the finished surface is consistently below grade, increase this value.
	Raise Response	If the boom is slow to rise, then increase this value.

Type	Option	Description
	Lower Speed	Looking at the surface from the apex to fully crowded, use Boom Lower Speed to make the attachment cut to grade. If the finished surface is consistently above grade, increase this value.
	Lower Response	If the boom is slow to lower, then increase this value.
	Take Off Speed	If the boom is not driving to grade within the first 0.5 m/1.5 ft after the stick is pulled, increase this value. Decreasing this value may reduce oscillations at the very beginning of the pass.
Joystick	Joystick Response Speed	If both the boom and attachment are slow to respond to stick movement, increase this value. Decreasing this value may reduce oscillations at the very beginning of the pass and oscillations observed when the stick movement is slow.
Attachment	Dump Speed	If the attachment is slow to dump for the full duration of the pass, increase this value.
	Dump Response	If the attachment is slow to dump, then increase this value.
	Curl Speed	If the attachment is slow to curl for the full duration of the pass, increase this value.
	Curl Response	If the attachment is slow to curl, then increase this value.
	Tilt Speed	If the attachment is slow to tilt, increase this value.
	Tilt Sensitivity	If the automatic tilt adjustment is erratic or jerky, decrease this value.

5. Tap Apply.

6. Make another test pass and compare the results. Repeat the process, if necessary, until you get the results you desire.

   You may need to enlist the help of your technician for further fine tuning and a precise check of the machine measure-up.

B.3 Depth Autos Setup, Tilt Autos Setup with a Non-Integrated Tiltrotator, or Both – Trimble Autos on Cat NGH series 07 machines

This information applies to Trimble Autos on Cat NGH series 07 machines

For Tilt Autos, the following information is relevant for a non-integrated tiltrotator. For a tilt bucket, tilting hitch or an integrated tiltrotator, see B.1 Depth Autos Setup, Tilt Autos Setup, or Both – Trimble Autos on Cat NGH series 07 machines

Autos performs best when grading a finish surface. After you finish bulk excavating and approach final grade, engage Autos.

Autos mode	What the system automatically controls
Depth Autos	The system automatically controls movement of the boom and attachment curl, while you manually control movement of the stick.
Tilt Autos	The system automatically controls movement of the attachment tilt, while you manually control movement of the rest of the front linkage.
Depth and Tilt Autos	The system automatically controls movement of the boom and attachment tilt and curl, while you manually control movement of the stick.

Note – Use Autos with a bucket, do not use it with any other type of attachment.

TIP – For information on best practices, see *6.3 Best Practices When Using Depth Autos* and *7.6 Best Practices When Using Tilt Autos*.

B.3.1 Autos status indicators

The Autos status indicators at the bottom left (Tilt) and right–hand corner (Depth) of the work screen show you what state Autos are currently in.

Status indicator	Status
	Manual Autos is enabled, but not engaged.

Status indicator	Status
	Manual interlock Autos is enabled but cannot be engaged. Possible reasons: Hydraulic lockout engaged, other menus or apps are obscuring the Autos icon.
	Autos ready Autos is enabled and engaged, but is not active because the attachment is outside the control range.
	Autos engaged Autos is enabled, engaged and active with the attachment inside the control range. In this state the system controls movement of the boom and attachment.
	Autos not ready Autos is enabled and engaged but cannot be active so Autos is temporarily suspended. Possible reason: GNSS precision is outside tolerance.

B.3.2 Enable and Engage Autos

WARNING — When Depth and Tilt Autos is engaged, the system will control movement of the boom and attachment. These movements could cause injury to anyone near the attachment, or damage to the machine. Always put the attachment on the ground and engage the hydraulic lockout before you leave the machine.
Do not use Depth and Tilt Autos when somebody is working near the attachment or if the ground conditions are unstable. Only use Depth and Tilt Autos to grade a finish surface. Disarm Depth and Tilt Autos when you perform other applications, such as lifting.

To use Depth Autos, Tilt Autos or both:

1. If you are in Depth and Slope mode, bench the machine before you use Autos.
   If you are in Design mode, load a design before you use Autos.
2. Position the machine on solid, stable ground to prevent rocking.
3. Make sure the machine's hydraulic oil reaches its normal operating temperature.

4. Select High Power mode and turn the throttle up to maximum revs.
   Note – It is okay to use the auto idle function on your machine.
5. Position the attachment within the control range.

TIP – Use the lightbars, cut/fills and buzzer to guide the attachment.

6. For Tilt Autos, enable the Auto function on the non-integrated tiltrotator controller.
   Note – For information on Tilt Autos with a tilt bucket, tilting hitch or an integrated tiltrotator, see B.1 Depth Autos Setup, Tilt Autos Setup, or Both – Trimble Autos on Cat NGH series 07 machines
7. On the Cat Machine Display, configure the joystick buttons for Depth Autos. This is a one-off setup task and will depend on the activation mode you select for Autos. This may be Assist on Demand or Toggle Autos.
   There may be applications where you want Autos functionality without having to use stick in or out joystick input. An example would be holding grade while slewing the machine with the attachment rotated at 90 degrees. In these situations, set the Autos mode to Assist on Demand.

Autos activation mode	Assign Autos to joystick button
Assist on Demand	a. If required, assign Grade Activation (Depth Autos) to a joystick button via the Cat Machine Display. b. Assign Assist On Demand to a joystick button via the Cat Machine Display.
Toggle Autos	If required, assign Grade Activation (Depth Autos) to a joystick button via the Cat Machine Display.

8. Enable Autos: For Depth Autos toggle on Grade Assist, either via the Cat Machine Display or the joystick buttons. For Tilt Autos toggle on Arm Tilt Autos in the Autos Setup screen. You can access the Autos Setup screen via the Work Settings menu.
9. Engage Autos: For Tilt Autos press and hold the tilt auto switch (as per your tiltrotator manufacturer instructions) as the attachment cutting edge approaches the design elevation. If the attachment is in the controls range it will start automatic tilt movement of the attachment. For Depth Autos:

Autos activation mode	Instructions to engage Depth Autos
Assist on Demand	Press and hold the Assist on Demand button as the attachment cutting edge approaches the design elevation. If the

Autos activation mode	Instructions to engage Depth Autos
	attachment is in the controls range it will start the automatic movement of the boom and attachment.
Toggle Autos	If the attachment is in the controls range and you move the stick it will start the automatic movement of the boom and attachment. Move the stick lever slowly to start the automatic movement of the boom. Once the attachment engages with the design and Depth Autos engages and the boom is in motion, you can increase the velocity of the stick. 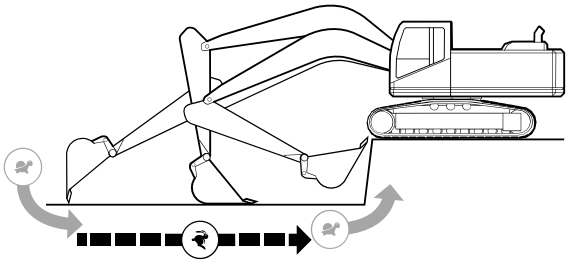

To temporarily disengage Tilt Autos, let go of the tilt auto switch. Press the tilt auto switch again to re-engage Tilt Autos. For Depth Autos:

Autos activation mode	Instruction to disengage and re-engage Depth Autos
Assist on Demand	Let go of the Assist on Demand button. Press and hold the Assist on Demand button again to re-engage Depth Autos.
Toggle Autos	– Stop moving the stick. Move the stick again to re-engage Depth Autos. OR – Toggle Autos off via the Grade button. Toggle the Grade Activation button again to re-engage Depth Autos.

Be aware that while Autos is disengaged you can cut beneath the design. Sometimes you may purposefully want to dig below design, however if this is not the case make sure that you monitor your cut/fills and lightbars.

You can manually override Autos at any time by moving the boom or attachment.

Select and Apply a Preset

You can select and apply the active preset via the Autos Setup or Autos Optimization screen. You can access these screens via the Work Settings menu. There is always at least one preset stored which is the Default preset set by your technician in the Web Interface. This cannot be edited or deleted.

Select the active preset that you require and tap Apply.

You can create, edit or delete a preset via the Autos Optimization screen. For more information, see B.4 Depth Autos Optimization, Tilt Autos Optimization with a Non-Integrated Tiltrotator, or Both – Trimble Autos on Cat NGH series 07 machines.

B.3.3 Troubleshooting

The table below lists some of the error messages that may appear when you use Autos. You may need to enlist the help of your technician to resolve the error states.

Error Message	Possible cause(s)
Auto State Not Visible	Suspect that: • Other menus or apps are obscuring the Autos icon. • You have Assist on Demand assigned to a joystick button, and have not enabled Grade Assist. • Valve calibration has not been completed. • Machine ECM does not currently support Autos. Missing Software Enabled Attachment or required license.
Machine Control System Error	Check the machine display for faults.

If you use the Cat Machine Display to change the direction of flow on a tilt attachment (changing from Normal to Reverse, or from Reverse to Normal), you must repeat the attachment measure-up process on the Cat Machine Display. Failure to do so may produce incorrect Tilt Autos performance.

If the joystick button that is assigned to Grade Assist (Depth Autos) on the Cat Machine Display is not working, assign Grade Assist (Depth Autos) to a new button or re-assign it to the original button.

B.4 Depth Autos Optimization, Tilt Autos Optimization with a Non-Integrated Tiltrotator, or Both – Trimble Autos on Cat NGH series 07 machines

This information applies to Trimble Autos on Cat NGH series 07 machines

For Tilt Autos, the following information is relevant for a non-integrated tiltrotator. For a tilt bucket, tilting hitch or an integrated tiltrotator, see Depth Autos Optimization, Tilt Autos Optimization, or Both – Trimble Autos on Cat NGH series 07 machines.

TIP – For information on how to use Autos, see *B.3 Depth Autos Setup, Tilt Autos Setup with a Non-Integrated Tiltrotator, or Both – Trimble Autos on Cat NGH series 07 machines*.

B.4.1 Presets

Presets allow you to save Autos Optimization settings so that you can restore them later. This is useful when there is a change in application or material.

Note – Presets are not dependent on the Auto mode selected. For example, if you create Preset 1 while in Depth and Tilt mode, the same boom and attachment speeds will appear if you select Preset 1 while in Depth mode and the same tilt speed will appear if you select Preset 1 while in Tilt mode.

Add a new preset

Note – When you add a new preset the Autos Optimization sliders are set to their default values.

1. In the Autos Optimization screen, tap Create. The Add New Preset screen opens.
2. Tap inside the *Preset Name* field and enter a descriptive name for the preset.
3. Tap Apply. You are returned to the Autos Optimization screen.
4. In the Autos Optimization screen, use the Autos sliders or the arrows to increase (▲) or decrease (▼) the values. For more information, see the section on optimizing the Autos performance.
5. The preset changes to a customized or temporary state (as indicated by the * next to the preset name and the italicized text).
6. Tap Apply to save the preset in its customized state.

   Note – All changes will be discarded if you select the original unmodified preset or a different preset. To save the customized preset permanently, tap Save As. See Save an edited preset with a new name.

Edit a preset

Note – If you try to switch to another preset while editing, the Discard All Changes? *confirmation message appears. Any unsaved changes you made will be lost if you tap Yes.*

1. In the Autos Optimization screen, select and apply a preset.
2. Use the Autos sliders or the arrows to increase (▲) or decrease (▼) any of the values.

   Any edit you make to a preset puts it into a customized and temporary state (as indicated by the * next to the preset name and the italicized text) .
3. To save the changes, tap Save As. The Save Preset As screen opens.
4. Turn on the Replace Existing slider. It will auto populate the Preset Name field with the name of the active preset. Tap Apply. You are returned to the Autos Optimization screen. The Preset Overwritten notification message appears.

TIP - To save the customized preset with a new name, see Save an edited preset with a new name.

Save an edited preset with a new name

Any active preset that is in a customized and temporary state (as indicated by the * next to the preset name and the italicized text) can be permanently saved as a new preset with a different name.

1. In the Autos Optimization screen, tap Save As. The Save Preset As screen opens.
2. Tap inside the *Preset Name* field and enter a descriptive name for the preset.
3. Tap Apply. You are returned to the Autos Optimization screen. The Preset Saved Successfully notification message appears.

TIP - If you turn on the Replace Existing slider, it will auto populate the Preset Name field with the name of the active preset. Tap Apply. You are returned to the Autos Optimization screen. The Preset Overwritten notification message appears.

Delete a preset

Note – You cannot delete the Default preset.

1. In the Autos Optimization screen, select a preset and tap the delete icon (🗑) on the right-hand side of the preset.
2. A Delete confirmation message appears.
3. Tap Yes to confirm the deletion.

B.4.2 Optimize the Depth and Tilt Autos performance

Note – Check that your technician has calibrated Autos before you try to adjust the values in the Autos Optimization screen.

You may need to adjust the Autos Optimization settings when, for example, you work with a different type of material (such as sand, dirt, or gravel).

Adjusting the settings in the Autos Optimization screen may improve the performance of Autos. For example, if the boom is overshooting above the target design grade when you pull in the stick, you can decrease the Boom Raise speed.

Autos performance is dependent on the speed that you pull in the stick. Experiment with different speeds to find the optimum for your machine and combination of attachment and material. For example:

- A slower or faster speed may produce a better result.
- A smooth take off speed helps.
- Do not vary the speed while optimizing the sliders.

1. Select High Power mode and turn the throttle up to maximum revs.
2. Using Depth and Tilt Autos, make a test pass in the material you are working, so that you can judge the current performance of Autos.
   a. Place the attachment on grade at near full reach.
   b. Engage Autos.
   c. Watch how quickly or slowly the attachment moves to the on-grade position.

   Note – The behavior of Autos when the attachment is not loaded with the same material you will work with does not provide enough information to adjust the values in the Autos Optimization screen. Always use this information in conjunction with the results of a test pass.
3. To make any changes, in the Autos Optimization screen, select the appropriate type from the Optimize drop-down list.
4. Move the slider(s) to increase or decrease the values for the following:

TIP – The apex is where the boom changes from raising to lowering during a pass.

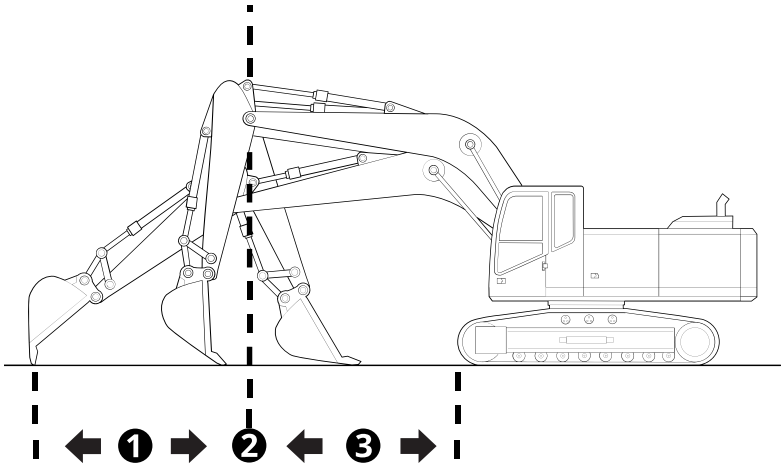

❶ Full reach to apex ❷ Apex ❸ Apex to fully crowded

Type	Option	Description
Attack Angle	Attack Angle	If required, move the Attack Angle slider to change the angle of the bottom of the attachment to the design surface. Zero is parallel, a negative value will lower the back of the attachment and a positive value will raise the back of the attachment.
Rake	Rake In Before Apex	If the finished surface is below grade when you perform a Rake In pass from full reach to the apex, increase this value.
	Rake In After Apex	If the finished surface is below grade when you perform a Rake In pass from apex to fully crowded, increase this value.
	Rake Out Before Apex	If the finished surface is below grade when you perform a Rake Out pass from fully crowded to the apex, increase this value.
	Rake Out After Apex	If the finished surface is below grade when you perform a Rake Out pass from the apex to full reach, increase

Type	Option	Description
		this value.
Flat Attachment In	Flat Attachment In (Boom) Before Apex	If the finished surface is below grade when you perform a Flat Attachment In pass from full reach to the apex, increase this value. This will control the boom raise and lower commands.
	Flat Attachment In (Boom) After Apex	If the finished surface is below grade when you perform a Flat Attachment In pass from the apex to fully crowded, increase this value. This will control the boom raise and lower commands.
	Flat Attachment In (Attachment) Before Apex	If the attachment changes angle too slowly and does not keep flat on grade when you perform a Flat Attachment In pass from full reach to the apex, increase this value.
	Flat Attachment In (Attachment) After Apex	If the attachment changes angle too slowly and does not keep flat on grade when you perform a Flat Attachment In pass from the apex to fully crowded, increase this value.
Flat Attachment Out	Flat Attachment Out (Boom) Before Apex	If the finished surface is below grade when you perform a Flat Attachment Out pass from fully crowded to the apex, increase this value. This will control the boom raise and lower commands.
	Flat Attachment Out (Boom) After Apex	If the attachment changes angle too slowly and does not keep flat on grade when you perform a Flat Attachment Out pass from the apex to full reach, increase this value. This will control the boom raise and lower commands.
	Flat Attachment Out (Attachment) Before Apex	If the attachment changes angle too slowly and does not keep flat on grade when you perform a Flat Attachment Out pass from fully crowded to the apex, increase this value.

Type	Option	Description
	Flat Attachment Out (Attachment) After Apex	If the attachment changes angle too slowly and does not keep flat on grade when you perform a Flat Attachment Out pass from the apex to full reach, increase this value.
Boom	Raise Speed	Looking at the surface from full reach to the apex, use Boom Raise Speed to make the attachment cut to grade. If the finished surface is consistently below grade, increase this value.
	Raise Response	If the boom is slow to rise, then increase this value.
	Lower Speed	Looking at the surface from the apex to fully crowded, use Boom Lower Speed to make the attachment cut to grade. If the finished surface is consistently above grade, increase this value.
	Lower Response	If the boom is slow to lower, then increase this value.
	Take Off Speed	If the boom is not driving to grade within the first 0.5 m/1.5 ft after the stick is pulled, increase this value. Decreasing this value may reduce oscillations at the very beginning of the pass.
Joystick	Joystick Response Speed	If both the boom and attachment are slow to respond to stick movement, increase this value. Decreasing this value may reduce oscillations at the very beginning of the pass and oscillations observed when the stick movement is slow.
Attachment	Dump Speed	If the attachment is slow to dump for the full duration of the pass, increase this value.
	Dump Response	If the attachment is slow to dump, then increase this value.

Type	Option	Description
	Curl Speed	If the attachment is slow to curl for the full duration of the pass, increase this value.
	Curl Response	If the attachment is slow to curl, then increase this value.
	Tilt Speed	If the attachment is slow to tilt, increase this value.
	Tilt Sensitivity	If the automatic tilt adjustment is erratic or jerky, decrease this value.

5. Tap Apply.
6. Make another test pass and compare the results. Repeat the process, if necessary, until you get the results you desire.

   You may need to enlist the help of your technician for further fine tuning and a precise check of the machine measure-up.

B.5 Best Practices When Using Depth Autos – Trimble Autos on Cat NGH series 07 machines

This information applies to Trimble Autos on Cat NGH series 07 machines only.

Observe the following best practices to obtain optimal results when using Depth Autos.

Note – Use Autos with a bucket, do not use it with any other type of attachment.

WARNING — Do not leave the cab when Depth Autos is engaged. When Depth Autos is engaged, the system will control movement of the boom and attachment. These movements could cause injury to anyone near the attachment, or damage to the machine. Always put the attachment on the ground and engage the hydraulic lockout before you leave the machine.
Do not use Depth Autos if the ground conditions are unstable. Only use Depth Autos to grade a finish surface. Disarm Depth Autos when you perform other applications, such as lifting.

TIP – When using Autos features, avoid connecting the Operator App device to the system via Wi-Fi. Ensure that you use a wired connection.

B.5.1 Prepare the machine

Procedures that your technician or installer should perform before you use Depth Autos:

- Check that the machine is in good operating condition.
- Check that none of the connecting pins (boom, stick, attachment and cylinders) have excessive wear. If the machine is loose, the system cannot produce optimal results.

B.5.2 Best practices for operating excavators

Depth Autos performs best when grading a finish surface.

Procedures to perform every time you use Depth Autos

- Position the machine on solid, stable ground to prevent rocking.

  Rocking will negatively affect the performance of Depth Autos. It is important that both excavator tracks are firmly planted on stable ground. It is not essential that the ground is flat (a sloping surface is okay).

  Note – If you do not have a tilt bucket, the machine will need to sit on a surface that is close to the cross slope on the target surface. The roll of the excavator (slope of the machine measured from one track to the opposite track) will determine the cross slope of the finish surface.

  TIP – If the attachment becomes unstable due to machine rocking, stop and wait until the attachment becomes stable before you try again. If the problem persists, prepare the ground that the machine tracks will sit on. Both tracks should sit on stable ground.

- Make sure the machine's hydraulic oil reaches its normal operating temperature.
- Select High Power mode and turn the throttle up to maximum revs.

  The hydraulic pump should always have maximum power available to it, so the hydraulic system can respond to automatic commands as quickly as possible.

  Note – It is okay to use the auto idle function on your machine.

  TIP – When starting the machine, make sure that it hasn't defaulted to another mode such as Economy or Standard Power. Some machines will default to a mode other than High Power when they are started.

- Position the attachment within the control range.

  TIP – Use the lightbars, cut/fills and buzzer to guide the attachment.

- If applicable, make sure the following features are disabled before you use Depth Autos:
  - Crane/heavy lift mode
  - Smart boom

Procedures to perform every time you change the attachment

- Check the performance of Depth Autos every time you change from one attachment to another, especially if you are going from a large heavy attachment to a smaller one or vice-versa.

  If necessary, adjust the sliders for the boom and/or attachment in the Autos Optimization screen. This can optimize Autos performance.

Procedures to perform, as required

- You can improve the performance of Depth Autos by adjusting the values in the Autos Optimization screen. For example, if the attachment is slow to curl for the full duration of the pass, increase the Attachment Curl Speed.

  Another example of when you might need to adjust the Autos Optimization values is when material conditions change.

Operating practices that can improve performance

- To improve grading performance when material conditions change, adjust the velocity of the stick movement, especially when you first initiate Depth Autos.

  If you use the attachment in a flat position on hard clay, you can initiate the stick lever quickly.

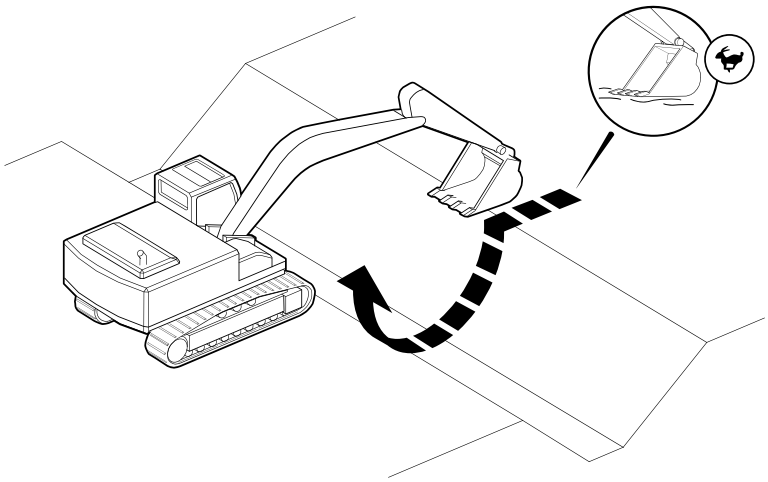

  If you use the attachment in the raking position in loose gravel, initiate the stick lever slowly.

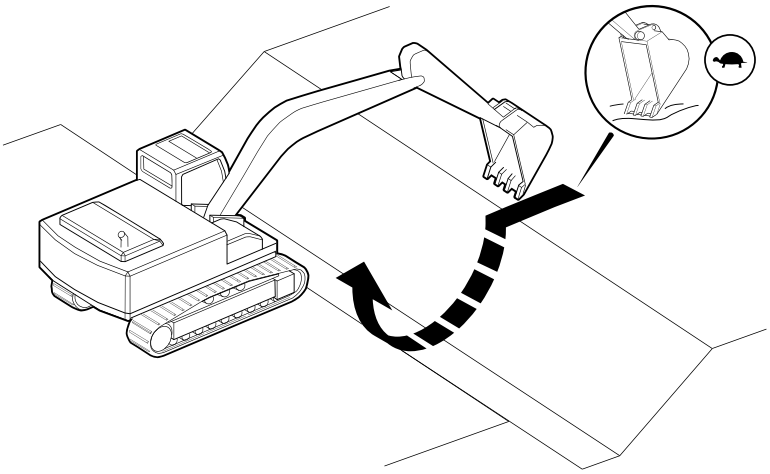

- Decrease the stick velocity when you reach and pass through the apex of the stick (when the boom changes from rising to lowering) or at transitions of slopes.
- If you use the attachment in a flat position when the cutting edge transitions from an uphill sloping to level design or from a level to downhill sloping design, Depth Autos is often not quick enough to raise the boom and dump the attachment, while also keeping the attachment locked to the design plane. As a result the attachment can unsnap from the design, as shown below.

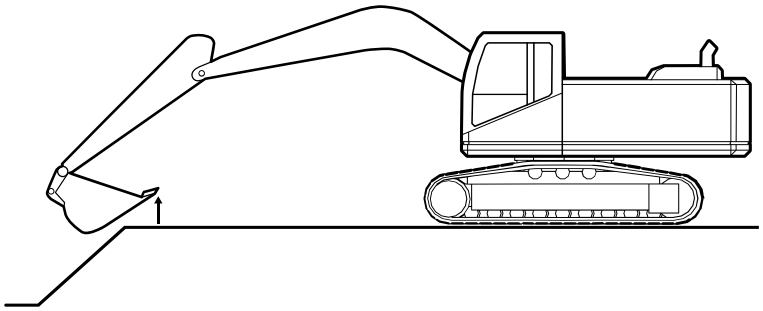

To avoid this, either grade through the transition with the attachment in the raking position or pass through the transition with a flat attachment and then re-position the attachment to grade the flat section, as shown below.

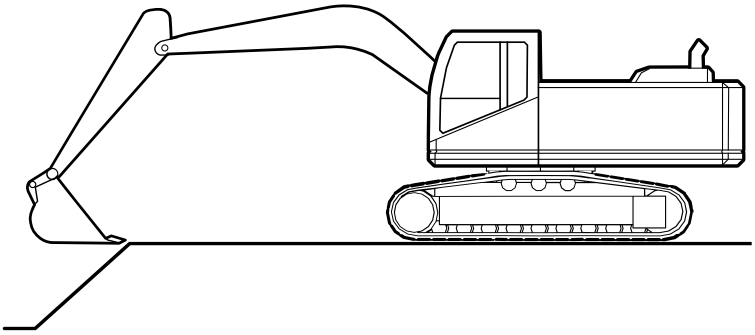

- To achieve the best results, leave the surface a little high before you make the final pass. The attachment is more stable while it is resting on material versus in the air.
- Have the attachment flat against the design surface for the final pass.

  Making a pass in loose material while the attachment is in the rake position will allow material to fall between the teeth. This results in the surface being a little high.
- To avoid under or over-cutting at the start of a flat attachment pass, match the attachment angle to the design and allow the attachment to snap to design slope before increasing stick velocity.
- The boom transition into Autos is smoother while the stick is in motion versus no motion.

  Avoid engaging Depth Autos while there is no stick motion and the stick is fully extended with the attachment in the rake position. If you want to start a pass in this position, move the stick slowly to prevent cutting below the target surface.
- When making a pass that will result in full stick cylinder extension, release the depth auto switch just prior to reaching full cylinder extent. This will allow smoother operation and avoid unwanted boom reaction when stalling the stick in Depth Autos.
- The attachment attack angle that will provide optimal grading performance in most applications is to align the cutting edge with the design surface.

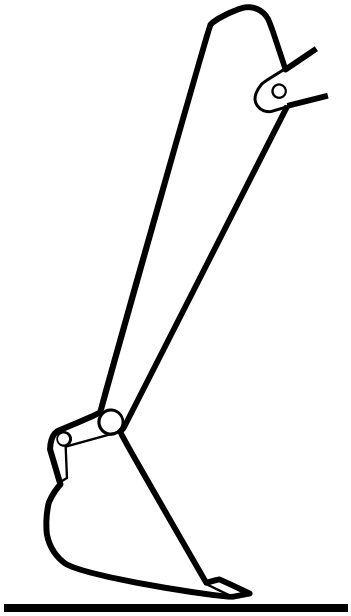

If the attachment attack angle is not aggressive enough, it will ride on the bottom of the attachment and will not allow the cutting edge to reach design. This will result in a system that will continually cut high and not get down to grade.

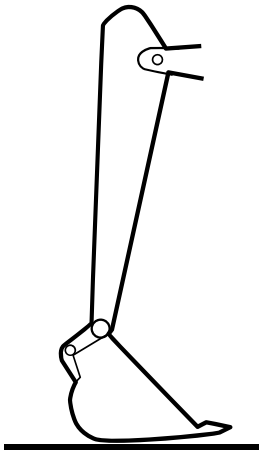

If the attachment attack angle is too aggressive, it will cut into the design when it encounters a load.

TIP – You may need to use this aggressive angle when you work with very hard material.

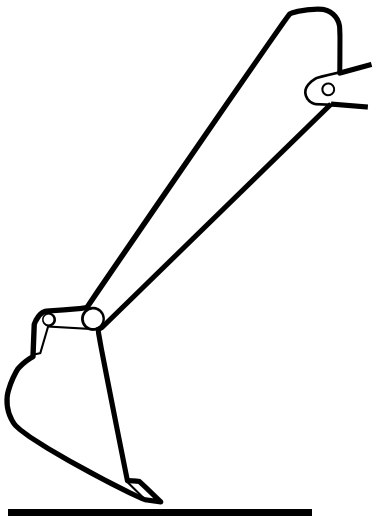

- In the Autos Optimization screen you can also move the Attachment Attack Angle slider to change the angle of the bottom of the attachment to the design surface.

  Zero is parallel, a negative value will lower the back of the attachment and a positive value will raise the back of the attachment

B.6 Best Practices When Using Tilt Autos – Trimble Autos on Cat NGH series 07 machines

This information applies to Trimble Autos on Cat NGH series 07 machines only.

Observe the following best practices to obtain optimal results when using Tilt Autos.

WARNING — Do not leave the cab when Tilt Autos is engaged. When Tilt Autos is engaged, the system will control movement of the tilt bucket or tilting hitch. These movements could cause injury to anyone near the attachment, or damage to the machine. Always put the attachment on the ground and engage the hydraulic lockout before you leave the machine.
Do not use Tilt Autos if the ground conditions are unstable. Only use Tilt Autos to grade a finish surface. Disarm Tilt Autos when you perform other applications, such as lifting.

TIP – When using Autos features, avoid connecting the Operator App device to the system via Wi-Fi. Ensure that you use a wired connection.

B.6.1 Prepare the machine

Before you use Tilt Autos, your technician or installer should check that:

- The machine is in good operating condition.
- None of the connecting pins (boom, stick, attachment and cylinders) have excessive wear. If the machine is loose, the system cannot produce optimal results.

B.6.2 Best practices for operating excavators

Tilt Autos performs best when grading a finish surface.

Procedures to perform every time you use Tilt Autos

- Position the machine on solid, stable ground to prevent rocking.

  Rocking negatively affects the performance of Tilt Autos. It is important that both excavator tracks are firmly planted on stable ground. It is not essential that the ground is level (a sloping surface is okay).

  TIP – If the attachment becomes unstable due to machine rocking, stop and wait until the attachment becomes stable before you try again. If the problem persists, prepare the ground that the machine tracks will sit on. Both tracks should sit on stable ground.

- Make sure the machine's hydraulic oil reaches its normal operating temperature.
- Turn the throttle up to maximum revs.
- Position the attachment within the control range.

  TIP – Use the lightbars, cut/fills and buzzer to guide the attachment.

- If applicable, make sure the following features are disabled before you use Tilt Autos:
  - Crane/heavy lift mode
  - Smart boom

Procedures to perform every time you change the attachment

- Check the performance of Tilt Autos every time you change from one attachment to another, especially if you are going from a large heavy attachment to a smaller one or vice-versa.

  If necessary, adjust the Tilt Speed slider in the Autos Optimization screen. This may optimize the performance of Tilt Autos.

Procedures to perform, as required

- If necessary, adjust the Tilt Speed slider in the Autos Optimization screen. This may optimize the performance of Tilt Autos.

  An example of when you might need to adjust this value is when material conditions change.
- If you use the Cat Machine Display to change the direction of flow on a tilt attachment (changing from Normal to Reverse, or from Reverse to Normal), you must repeat the attachment measure-up process on the Cat Machine Display. Failure to do so may produce incorrect Tilt Autos performance.

Operating practices that can improve performance

- Minimize slew on steep slopes when you initiate Autos. A small horizontal change can make a large vertical difference.
- To improve grading performance when material conditions change, adjust the velocity of the stick, especially when you first initiate Tilt Autos.
- To achieve the best results, leave the surface a little high before you make the final pass. The attachment is more stable while it is resting on material versus in the air.
- To avoid under or over-cutting at the start of a pass, allow the attachment to snap to design slope before increasing stick velocity.
- On some design slopes, it may not be possible for Tilt Autos to reach grade within the tilt cylinder extents. If this occurs, you may need to reposition the bucket and/or machine.
- When approaching changes in design grade, it is best to reduce stick speed and align the bucket tips to the design break-line.
- It is best to avoid straddling changes in design grade by working along/across the design changes and/or adjusting the vertical guidance point location (located in the Work Setting > Attachments menu).

B.7 Depth Autos Setup on Cat NGH mini/micro machines

Depth Autos performs best when grading a finish surface. After you finish bulk excavating and approach final grade, engage Autos. The system automatically controls movement of the boom and attachment, while you manually control movement of the stick.

Note – Use Autos with a bucket, do not use it with any other type of attachment.

Note – For machines with a two-piece boom, do not move the upper boom while in Autos mode.

TIP – For information on best practices, see *6.3 Best Practices When Using Depth Autos*.

TIP – When using Autos features, avoid connecting the Operator App device to the system via Wi-Fi. Ensure that you use a wired connection.

B.7.1 Depth Autos status indicators

The Depth Autos status indicators at the bottom right–hand corner of the work screen show you what state Autos are currently in.

Status indicator	Status
	Manual Depth Autos is armed, but not engaged.
	Manual interlock Depth Autos is armed but cannot be engaged. Possible reason: Hydraulic lockout engaged, other menus or apps are obscuring the Autos icon.
	Depth Autos ready Depth Autos is armed and engaged, but is not active because the attachment is outside the control range.
	Depth Autos engaged Depth Autos is armed, engaged and active with the attachment inside the control range. In this state the system controls movement of the boom and attachment.
	Depth Autos not ready Depth Autos is armed and engaged but cannot be active so Autos is temporarily suspended. Possible reason: Elevation not benched.

B.7.2 Arm and Engage Depth Autos

WARNING — Do not leave the cab when Depth Autos is engaged. When Depth Autos is engaged, the system will control movement of the boom and attachment. These movements could cause injury to anyone near the attachment, or damage to the machine. Always put the attachment on the ground and engage the hydraulic lockout before you leave the machine.
Do not use Depth Autos if the ground conditions are unstable. Only use Depth Autos to grade a finish surface. Disarm Depth Autos when you perform other applications, such as lifting.

To use Depth Autos:

1. If you are in Depth and Slope mode, bench the machine before you use Depth Autos. If you are in Design mode, load a design before you use Depth Autos.
2. Position the machine on solid, stable ground to prevent rocking.
3. Make sure the machine's hydraulic oil reaches its normal operating temperature (55°C/130°F).
4. Select High Power mode and turn the throttle up to maximum revs.
   Note – It is okay to use the auto idle function on your machine.
5. Position the attachment within the control range.

TIP – Use the lightbars, cut/fills and buzzer to guide the attachment.

6. Set the Grade Configuration to Depth Only and toggle on Grade Enable via the Cat Machine Display.
7. Press the Grade Auto switch and acknowledge the Grade Enable message on the Cat Machine Display.

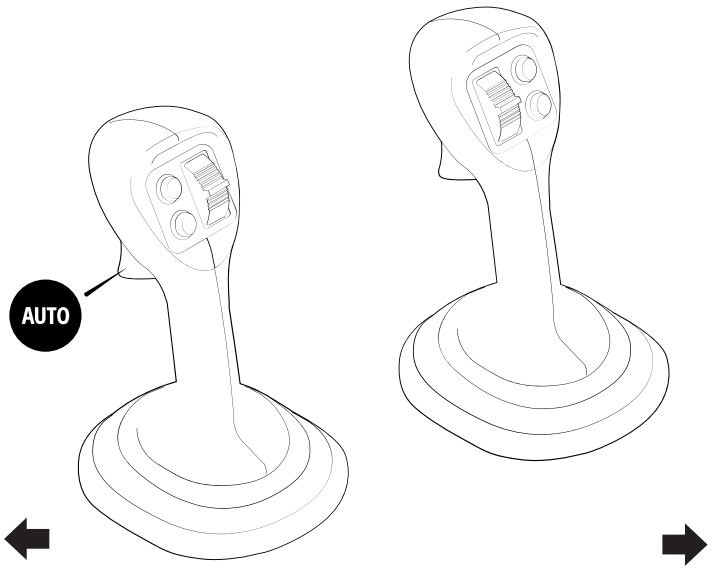

8. To engage Depth Autos: Press and hold the Grade Auto switch as the attachment cutting edge approaches the design elevation. If the attachment is in the controls range it will start the automatic movement of the boom and attachment.

   To temporarily disengage Depth Autos: Let go of the Grade Auto switch. Be aware that while Autos is disengaged you can cut beneath the design. Sometimes you may purposefully want to dig below design, however if this is not the case make sure that you monitor your cut/fills and lightbars. Press the Grade Auto switch again to re-engage Depth Autos.

   You can manually override Autos at any time by moving the boom or attachment.

Select and Apply a Preset

You can select and apply the active preset via the Autos Setup or Autos Optimization screen. You can access these screens via the Work Settings menu. There is always at least one preset stored which is the Default preset set by your technician in the Web Interface. This cannot be edited or deleted.

Select the active preset that you require and tap Apply.

You can create, edit or delete a preset via the Autos Optimization screen. For more information, see B.8 Depth Autos Optimization on Cat NGH mini/micro machines.

B.7.3 Troubleshooting

The table below lists some of the error messages that may appear when you use Autos. You may need to enlist the help of your technician to resolve the error states.

Error Message	Possible cause(s)
Auto State Not Visible	Suspect that other menus or apps are obscuring the Autos icon.

B.8 Depth Autos Optimization on Cat NGH mini/micro machines

Note – If want to use Depth and Tilt Autos together, see B.12 Depth and Tilt Autos Optimization on Cat NGH mini/micro machines. This chapter is only for using Depth Autos.

TIP – For information on how to use Autos, see *B.7 Depth Autos Setup on Cat NGH mini/micro machines*.

B.8.1 Presets

Presets allow you to save Autos Optimization settings so that you can restore them later. This is useful when there is a change in application or material.

Note – Presets are not dependent on the Auto mode selected. For example, if you create Preset 1 while in Depth and Tilt mode, the same boom and attachment speeds will appear if you select Preset 1 while in Depth mode and the same tilt speed will appear if you select Preset 1 while in Tilt mode.

Select and Apply a Preset

You can select and apply the active preset via the Autos Setup or Autos Optimization screen. You can access these screens via the Work Settings menu. There is always at least

one preset stored which is the Default preset set by your technician in the Web Interface. This cannot be edited or deleted.

Select the active preset that you require and tap Apply.

Add a new preset

Note – When you add a new preset the Autos Optimization sliders are set to their default values.

1. In the Autos Optimization screen, tap Create. The Add New Preset screen opens.
2. Tap inside the *Preset Name* field and enter a descriptive name for the preset.
3. Tap Apply. You are returned to the Autos Optimization screen.
4. In the Autos Optimization screen, use the Autos sliders or the arrows to increase (▲) or decrease (▼) the values. For more information, see the section on optimizing the Autos performance.
5. The preset changes to a customized or temporary state (as indicated by the * next to the preset name and the italicized text).
6. Tap Apply to save the preset in its customized state.

   Note – All changes will be discarded if you select the original unmodified preset or a different preset. To save the customized preset permanently, tap Save As. See Save an edited preset with a new name.

Edit a preset

Note – If you try to switch to another preset while editing, the Discard All Changes? *confirmation message appears. Any unsaved changes you made will be lost if you tap Yes.*

1. In the Autos Optimization screen, select and apply a preset.
2. Use the Autos sliders or the arrows to increase (▲) or decrease (▼) any of the values.

   Any edit you make to a preset puts it into a customized and temporary state (as indicated by the * next to the preset name and the italicized text) .
3. To save the changes, tap Save As. The Save Preset As screen opens.
4. Turn on the Replace Existing slider. It will auto populate the Preset Name field with the name of the active preset. Tap Apply. You are returned to the Autos Optimization screen. The Preset Overwritten notification message appears.

TIP - To save the customized preset with a new name, see Save an edited preset with a new name.

Save an edited preset with a new name

Any active preset that is in a customized and temporary state (as indicated by the * next to the preset name and the italicized text) can be permanently saved as a new preset with a

different name.

1. In the Autos Optimization screen, tap Save As. The Save Preset As screen opens.
2. Tap inside the *Preset Name* field and enter a descriptive name for the preset.
3. Tap Apply. You are returned to the Autos Optimization screen. The Preset Saved Successfully notification message appears.

TIP - If you turn on the Replace Existing slider, it will auto populate the Preset Name field with the name of the active preset. Tap Apply. You are returned to the Autos Optimization screen. The Preset Overwritten notification message appears.

Delete a preset

Note – You cannot delete the Default preset.

1. In the Autos Optimization screen, select a preset and tap the delete icon ( ) on the right-hand side of the preset.
2. A Delete confirmation message appears.
3. Tap Yes to confirm the deletion.

B.8.2 Optimize the Depth Autos performance

Note – Check that your technician has calibrated Autos before you try to adjust the values in the Autos Optimization screen.

You may need to adjust the Autos Optimization settings when, for example, you work with a different type of material (such as sand, dirt, or gravel).

Adjusting the settings in the Autos Optimization screen may improve the performance of Autos. For example, if the boom is overshooting above the target design grade when you pull in the stick, you can decrease the Boom Raise speed.

Autos performance is dependent on the speed that you pull in the stick. Experiment with different speeds to find the optimum for your machine and combination of attachment and material. For example:

- A slower or faster speed may produce a better result.
- A smooth take off speed helps.
- Do not vary the speed while optimizing the sliders.

1. Select High Power mode and turn the throttle up to maximum revs.
2. Using Depth Autos, make a test pass in the material you are working, so that you can judge the current performance of Autos.
   a. Place the attachment on grade at near full reach.
   b. Engage Autos.

c. Watch how quickly or slowly the attachment moves to the on-grade position.

Note – The behavior of Autos when the attachment is not loaded with the same material you will work with does not provide enough information to adjust the values in the Autos Optimization screen. Always use this information in conjunction with the results of a test pass.

3. To make any changes, in the Autos Optimization screen, select the appropriate type from the Optimize drop-down list.
4. Move the slider(s) to increase or decrease the values for the following:

TIP – The apex is where the boom changes from raising to lowering during a pass.

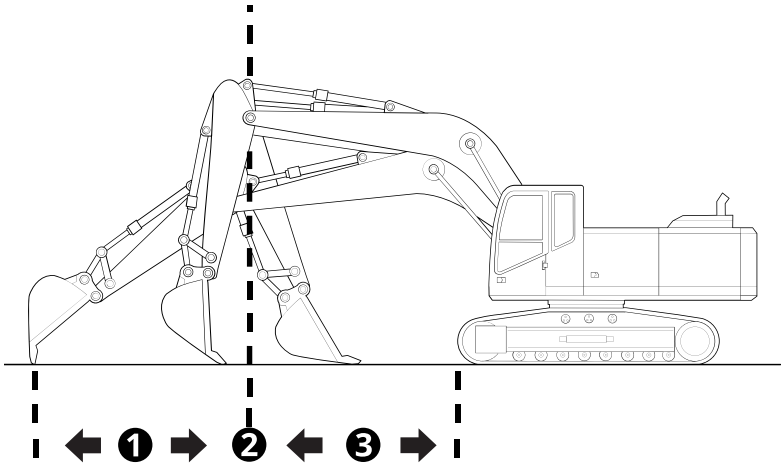

❶ Full reach to apex ❷ Apex ❸ Apex to fully crowded

Type	Option	Description
Attack Angle	Attack Angle	If required, move the Attack Angle slider to change the angle of the bottom of the attachment to the design surface. Zero is parallel, a negative value will lower the back of the attachment and a positive value will raise the back of the attachment.
Rake	Rake In Before Apex	If the finished surface is below grade when you perform a Rake In pass from full reach to the apex, increase this value.

Type	Option	Description
	Rake In After Apex	If the finished surface is below grade when you perform a Rake In pass from apex to fully crowded, increase this value.
	Rake Out Before Apex	If the finished surface is below grade when you perform a Rake Out pass from fully crowded to the apex, increase this value.
	Rake Out After Apex	If the finished surface is below grade when you perform a Rake Out pass from the apex to full reach, increase this value.
Flat Attachment In	Flat Attachment In (Boom) Before Apex	If the finished surface is below grade when you perform a Flat Attachment In pass from full reach to the apex, increase this value. This will control the boom raise and lower commands.
	Flat Attachment In (Boom) After Apex	If the finished surface is below grade when you perform a Flat Attachment In pass from the apex to fully crowded, increase this value. This will control the boom raise and lower commands.
	Flat Attachment In (Attachment) Before Apex	If the attachment changes angle too slowly and does not keep flat on grade when you perform a Flat Attachment In pass from full reach to the apex, increase this value.
	Flat Attachment In (Attachment) After Apex	If the attachment changes angle too slowly and does not keep flat on grade when you perform a Flat Attachment In pass from the apex to fully crowded, increase this value.
Flat Attachment Out	Flat Attachment Out (Boom) Before Apex	If the finished surface is below grade when you perform a Flat Attachment Out pass from fully crowded to the apex, increase this value. This will control the boom raise and lower commands.

Type	Option	Description
	Flat Attachment Out (Boom) After Apex	If the attachment changes angle too slowly and does not keep flat on grade when you perform a Flat Attachment Out pass from the apex to full reach, increase this value. This will control the boom raise and lower commands.
	Flat Attachment Out (Attachment) Before Apex	If the attachment changes angle too slowly and does not keep flat on grade when you perform a Flat Attachment Out pass from fully crowded to the apex, increase this value.
	Flat Attachment Out (Attachment) After Apex	If the attachment changes angle too slowly and does not keep flat on grade when you perform a Flat Attachment Out pass from the apex to full reach, increase this value.
Boom	Raise Speed	Looking at the surface from full reach to the apex, use Boom Raise Speed to make the attachment cut to grade. If the finished surface is consistently below grade, increase this value.
	Raise Response	If the boom is slow to rise, then increase this value.
	Lower Speed	Looking at the surface from the apex to fully crowded, use Boom Lower Speed to make the attachment cut to grade. If the finished surface is consistently above grade, increase this value.
	Lower Response	If the boom is slow to lower, then increase this value.
	Take Off Speed	If the boom is not driving to grade within the first 0.5 m/1.5 ft after the stick is pulled, increase this value. Decreasing this value may reduce oscillations at the very beginning of the pass.

Type	Option	Description
Joystick	Joystick Response Speed	If both the boom and attachment are slow to respond to stick movement, increase this value. Decreasing this value may reduce oscillations at the very beginning of the pass and oscillations observed when the stick movement is slow.
Attachment	Dump Speed	If the attachment is slow to dump for the full duration of the pass, increase this value.
	Dump Response	If the attachment is slow to dump, then increase this value.
	Curl Speed	If the attachment is slow to curl for the full duration of the pass, increase this value.
	Curl Response	If the attachment is slow to curl, then increase this value.

5. Tap Apply.
6. Make another test pass and compare the results. Repeat the process, if necessary, until you get the results you desire.

   You may need to enlist the help of your technician for further fine tuning and a precise check of the machine measure-up.

B.9 Tilt Autos Setup on Cat NGH mini/micro machines

Note – If you want to use Depth and Tilt Autos together, see B.11 Depth and Tilt Autos Setup on Cat NGH mini/micro machines.

Tilt Autos performs best when grading a finish surface. After you finish bulk excavating and approach final grade, engage Autos. The system automatically controls movement of the attachment tilt, while you manually control movement of the rest of the front linkage.

Note – Tilt Autos is only supported via certain models of tiltrotator.

TIP – When using Autos features, avoid connecting the Operator App device to the system via Wi-Fi. Ensure that you use a wired connection.

Tilt Autos can automatically move the tilting attachment at rotation angles 70° from forward and 70° from backwards. The tilt cylinders do not rotate with the attachment, so outside of

this range the cylinders drive attachment dump/curl instead of tilt. If the attachment falls outside this range, you get the message: Attachment tilt is outside of measurable range.

Note – This does not apply if you have an engcon tiltrotator with protocol ePS 2.0.

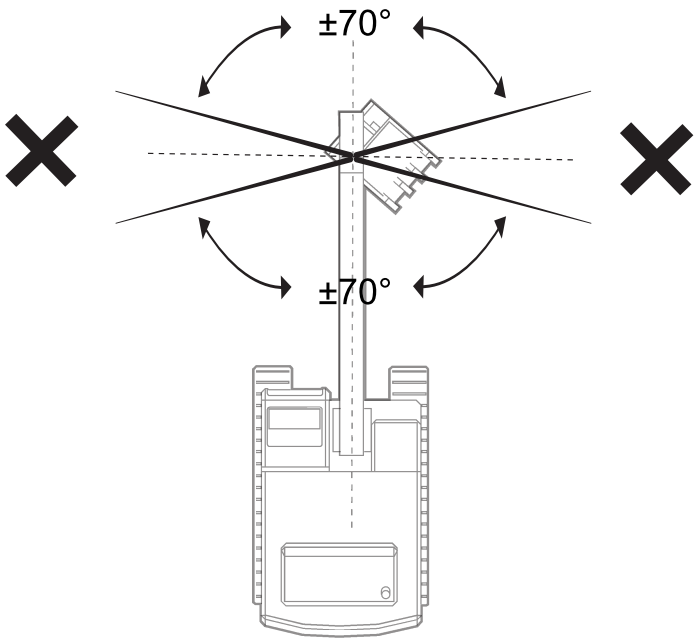

TIP – For information on best practices, see *7.6 Best Practices When Using Tilt Autos*.

B.9.1 Tilt Autos status indicators

The Tilt Autos status indicators at the bottom left–hand corner of the work screen show you what state Autos are currently in.

Status indicator	Status
	Manual Tilt Autos is enabled, but not engaged.
	Manual interlock Tilt Autos is enabled but cannot be engaged. Possible reasons: Hydraulic lockout engaged, other menus or apps are obscuring the Autos icon.
	Tilt Autos ready Tilt Autos is enabled and engaged, but is not active because the attachment is outside the control range.

Status indicator	Status
	Tilt Autos engaged Tilt Autos is enabled, engaged and active with the attachment inside the control range. In this state the system controls movement of the attachment.
	Tilt Autos not ready Tilt Autos is enabled and engaged but cannot be active so Autos is temporarily suspended. Possible reasons: GNSS precision is outside tolerance, attachment is off design.

B.9.2 Enable and Engage Tilt Autos

WARNING — When Tilt Autos is engaged, the system will control movement of the attachment tilt. These movements could cause injury to anyone near the attachment, or damage to the machine. Always put the attachment on the ground and engage the hydraulic lockout before you leave the machine.
Do not use Tilt Autos when somebody is working near the attachment or if the ground conditions are unstable. Only use Tilt Autos to grade a finish surface.
Disarm Tilt Autos when you perform other applications, such as lifting.

To use Tilt Autos:

1. If you are in Depth and Slope mode, bench the machine before you use Tilt Autos.
   If you are in Design mode, load a design before you use Tilt Autos.
2. Position the machine on solid, stable ground to prevent rocking.
3. Make sure the machine's hydraulic oil reaches its normal operating temperature (55°C/130°F).
4. Select High Power mode and turn the throttle up to maximum revs.
   Note – You can use the auto idle function on your machine.
5. Position the attachment within the control range.

   TIP – Use the lightbars, cut/fills and buzzer to guide the attachment.

6. If you are using a non-integrated tiltrotator:
   a. Toggle off Grade Enable via the Cat Machine Display.
   b. Access the Autos Setup screen via the Work Settings menu.
   c. In the Autos Setup screen, toggle Arm Tilt Autos on and tap Apply.

d. To engage Tilt Autos: Press and hold the Tilt Autos switch as the attachment cutting edge approaches the design elevation. If the attachment is in the controls range it will start automatic movement of the attachment as you move the stick lever.

7. If you are using an integrated tiltrotator:
   a. Set the Grade Configuration to Tilt Only and toggle on Grade Enable via the Cat Machine Display.
   b. Press the Grade Auto switch and acknowledge the Grade Enable message on the Cat Machine Display.

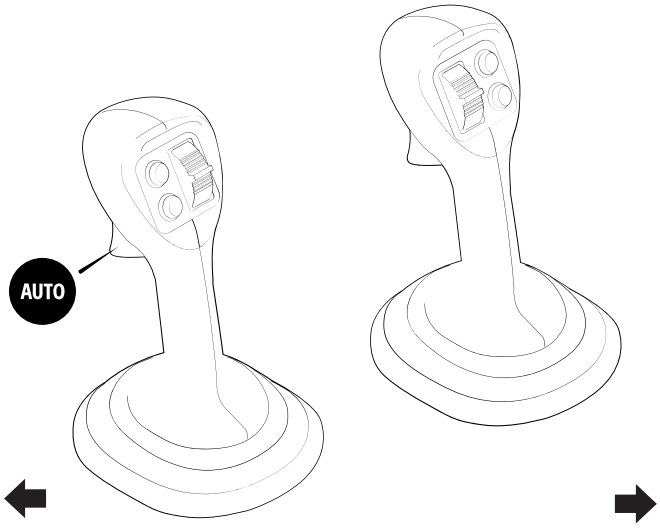

   c. To engage Tilt Autos: Press and hold the Grade Auto switch as the attachment cutting edge approaches the design elevation. If the attachment is in the controls range it will start automatic movement of the attachment as you move the stick lever.

      To temporarily disengage Tilt Autos: Let go of the Grade Auto switch. Be aware that while Tilt Autos is disengaged you can cut beneath the design. Sometimes you may purposefully want to dig below design, however if this is not the case make sure that you monitor your cut/fills and lightbars. Press and hold the Grade Auto switch again to re-engage Tilt Autos.

      You can manually override Tilt Autos at any time by moving the attachment.

Select and Apply a Preset

You can select and apply the active preset via the Autos Setup or Autos Optimization screen. You can access these screens via the Work Settings menu. There is always at least one preset stored which is the Default preset set by your technician in the Web Interface. This cannot be edited or deleted.

Select the active preset that you require and tap Apply.

You can create, edit or delete a preset via the Autos Optimization screen. For more information, see B.10 Tilt Autos Optimization on Cat NGH mini/micro machines.

B.9.3 Troubleshooting

The table below lists some of the error messages that may appear when you use Autos. You may need to enlist the help of your technician to resolve the error states.

Error Message	Possible cause(s)
Auto State Not Visible	Suspect that other menus or apps are obscuring the Autos icon.
Machine Control System Error	Check the machine display for faults.

Note – When using an integrated tiltrotator, the tilt bucket angle values on this system and the Cat monitor may show a slight difference in values. This is because the data is coming from different sensors.

TIP – When using an integrated tiltrotator, if the bucket tips do not drive to the correct grade try performing a 360 degree revolution of the tiltrotator. This executes an internal calibration that resolves the driving to grade issue.

B.10 Tilt Autos Optimization on Cat NGH mini/micro machines

Note – If you want to use Depth and Tilt Autos together, see B.12 Depth and Tilt Autos Optimization on Cat NGH mini/micro machines.

TIP – When using Autos features, avoid connecting the Operator App device to the system via Wi-Fi. Ensure that you use a wired connection.

TIP – For information on how to use Autos, see *B.9 Tilt Autos Setup on Cat NGH mini/micro machines*.

B.10.1 Presets

Presets allow you to save Autos Optimization settings so that you can restore them later. This is useful when there is a change in application or material.

Note – Presets are not dependent on the Auto mode selected. For example, if you create Preset 1 while in Depth and Tilt mode, the same boom and attachment speeds will appear if you select Preset 1 while in Depth mode and the same tilt speed will appear if you select Preset 1 while in Tilt mode.

Select and Apply a Preset

You can select and apply the active preset via the Autos Setup or Autos Optimization screen. You can access these screens via the Work Settings menu. There is always at least one preset stored which is the Default preset set by your technician in the Web Interface. This cannot be edited or deleted.

Select the active preset that you require and tap Apply.

Add a new preset

Note – When you add a new preset the Autos Optimization sliders are set to their default values.

1. In the Autos Optimization screen, tap Create. The Add New Preset screen opens.
2. Tap inside the *Preset Name* field and enter a descriptive name for the preset.
3. Tap Apply. You are returned to the Autos Optimization screen.
4. In the Autos Optimization screen, use the Autos sliders or the arrows to increase (▲) or decrease (▼) the values. For more information, see the section on optimizing the Autos performance.
5. The preset changes to a customized or temporary state (as indicated by the * next to the preset name and the italicized text).
6. Tap Apply to save the preset in its customized state.

   Note – All changes will be discarded if you select the original unmodified preset or a different preset. To save the customized preset permanently, tap Save As. See Save an edited preset with a new name.

Edit a preset

Note – If you try to switch to another preset while editing, the Discard All Changes? *confirmation message appears. Any unsaved changes you made will be lost if you tap Yes.*

1. In the Autos Optimization screen, select and apply a preset.
2. Use the Autos sliders or the arrows to increase (▲) or decrease (▼) any of the values.

   Any edit you make to a preset puts it into a customized and temporary state (as indicated by the * next to the preset name and the italicized text) .
3. To save the changes, tap Save As. The Save Preset As screen opens.
4. Turn on the Replace Existing slider. It will auto populate the Preset Name field with the name of the active preset. Tap Apply. You are returned to the Autos Optimization screen. The Preset Overwritten notification message appears.

TIP - To save the customized preset with a new name, see Save an edited preset with a new name.

Save an edited preset with a new name

Any active preset that is in a customized and temporary state (as indicated by the * next to the preset name and the italicized text) can be permanently saved as a new preset with a different name.

1. In the Autos Optimization screen, tap Save As. The Save Preset As screen opens.
2. Tap inside the *Preset Name* field and enter a descriptive name for the preset.
3. Tap Apply. You are returned to the Autos Optimization screen. The Preset Saved Successfully notification message appears.

TIP - If you turn on the Replace Existing slider, it will auto populate the Preset Name field with the name of the active preset. Tap Apply. You are returned to the Autos Optimization screen. The Preset Overwritten notification message appears.

Delete a preset

Note – You cannot delete the Default preset.

1. In the Autos Optimization screen, select a preset and tap the delete icon (🗑) on the right-hand side of the preset.
2. A Delete confirmation message appears.
3. Tap Yes to confirm the deletion.

B.10.2 Optimize the Tilt Autos performance

Note – Check that your technician has calibrated Autos before you try to adjust the values in the Autos Optimization screen.

You may need to adjust the Autos Optimization values when, for example, you work with a different type of material (such as sand, dirt, or gravel).

Adjusting the values in the Autos Optimization screen may improve the performance of Autos. For example, adjusting the tilt sensitivity setting may increase the smoothness of the tilt movements.

Autos performance is dependent on the speed that you pull in the stick. Experiment with different speeds to find the optimum for your machine and combination of attachment and material. For example:

- A slower or faster speed may produce a better result.
- A smooth take off speed helps.
- Do not vary the speed while optimizing the sliders.

1. Select High Power mode and turn the throttle up to maximum revs.
2. Using Tilt Autos, make a test pass in the material you are working, so that you can judge the current performance of Autos.
   a. Place the attachment on grade at near full reach.
   b. Engage Autos.
   c. Watch how quickly or slowly the attachment moves to the on-grade position.

   Note – The behavior of Autos when the attachment is not loaded with the same material you will work with does not provide enough information to adjust the values in the Autos Optimization screen. Always use this information in conjunction with the results of a test pass.
3. To make any changes, in the Autos Optimization screen, move the slider(s) to increase or decrease the values for the following:

Type	Option	Description
Attachment	Tilt Speed	If the attachment is slow to tilt, increase this value.
	Tilt Sensitivity	If the automatic tilt adjustment is erratic or jerky, decrease this value.

4. Tap Apply.
5. Make another test pass and compare the results. Repeat the process, if necessary, until you get the results you desire.

   You may need to enlist the help of your technician for further fine tuning and a precise check of the machine measure-up.

B.11 Depth and Tilt Autos Setup on Cat NGH mini/micro machines

Note – If you only want to use Depth Autos, see B.7 Depth Autos Setup on Cat NGH mini/micro machines. If you only want to use Tilt Autos, see B.9 Tilt Autos Setup on Cat NGH mini/micro machines. This chapter is for using Depth and Tilt Autos together.

Depth and Tilt Autos performs best when grading a finish surface. After you finish bulk excavating and approach final grade, engage Autos. The system automatically controls movement of the boom and attachment, while you manually control movement of the stick.

Note – Tilt Autos is only supported via certain models of tiltrotator.

Note – Use Depth and Tilt Autos with a bucket, do not use it with any other type of attachment.

Note – For machines with a two-piece boom, do not move the upper boom while in Autos mode.

TIP – For information on best practices, see *6.3 Best Practices When Using Depth Autos* and *7.6 Best Practices When Using Tilt Autos*.

TIP – When using Autos features, avoid connecting the Operator App device to the system via Wi-Fi. Ensure that you use a wired connection.

B.11.1 Depth and Tilt Autos status indicators

The Depth and Tilt Autos status indicators at the bottom left (Tilt) and right–hand corner (Depth) of the work screen show you what state Autos are currently in.

Status indicator	Status
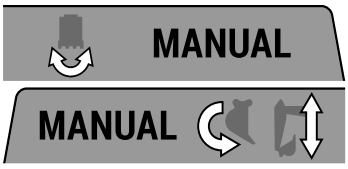	*Manual* Depth and Tilt Autos is enabled, but not engaged.
	Manual interlock Depth and Tilt Autos is enabled but cannot be engaged. Possible reasons: Hydraulic lockout engaged, other menus or apps are obscuring the Autos icon.
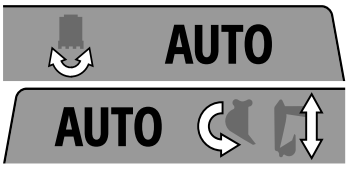	*Depth and Tilt Autos ready* Depth and Tilt Autos is enabled and engaged, but is not active because the attachment is outside the control range.
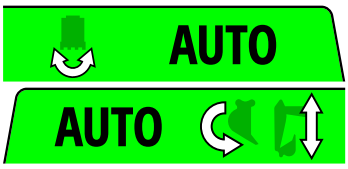	*Depth and Tilt Autos engaged* Depth and Tilt Autos is enabled, engaged and active with the attachment inside the control range. In this state the system controls movement of the boom and attachment.
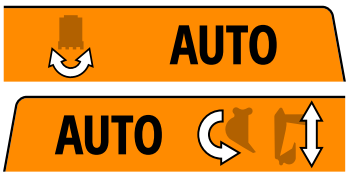	*Depth and Tilt Autos not ready* Depth and Tilt Autos is enabled and engaged but cannot be active so Autos is temporarily suspended. Possible reason: GNSS precision is outside tolerance.

B.11.2 Enable and Engage Depth and Tilt Autos

WARNING — When Depth and Tilt Autos is engaged, the system will control movement of the boom and attachment. These movements could cause injury to anyone near the attachment, or damage to the machine. Always put the attachment on the ground and engage the hydraulic lockout before you leave the machine.
Do not use Depth and Tilt Autos when somebody is working near the attachment or if the ground conditions are unstable. Only use Depth and Tilt Autos to grade a finish surface. Disarm Depth and Tilt Autos when you perform other applications, such as lifting.

To use Depth and Tilt Autos:

1. If you are in Depth and Slope mode, bench the machine before you use Depth and Tilt Autos.
   If you are in Design mode, load a design before you use Depth and Tilt Autos.
2. Position the machine on solid, stable ground to prevent rocking.
3. Make sure the machine's hydraulic oil reaches its normal operating temperature (55°C/130°F).
4. Select High Power mode and turn the throttle up to maximum revs.
   Note – It is okay to use the auto idle function on your machine.
5. Position the attachment within the control range. Be aware that the Autos limits are different for depth and tilt. Tilt Autos will engage when the focus point is within 1 m (3.3 ft) from design or bench, but Depth Autos will not engage until the focus point is within 0.4 m (1.3 ft).

   TIP – Use the lightbars, cut/fills and buzzer to guide the attachment.

6. If you are using a non-integrated tiltrotator:
   a. Set the Grade Configuration to Depth Only and toggle on Grade Enable via the Cat Machine Display.
   b. Access the Autos Setup screen via the Work Settings menu.
   c. In the Autos Setup screen, toggle Arm Tilt Autos on and tap Apply.
   d. Press the Grade Auto switch and acknowledge the Grade Enable message on the Cat Machine Display.

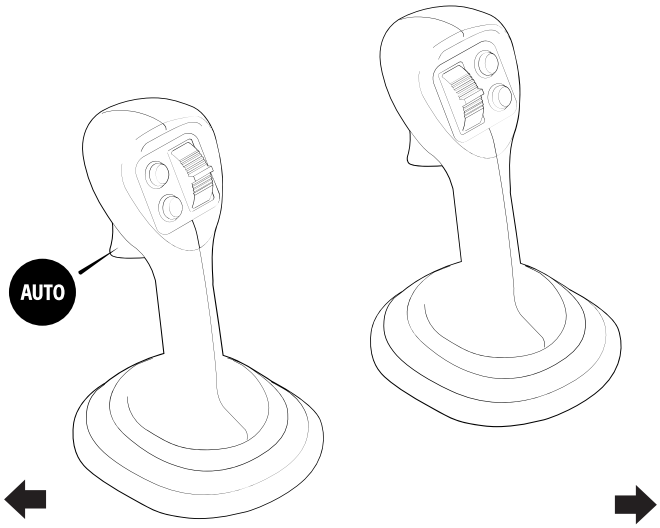

e. To engage Depth Autos: Press and hold the Grade Autos switch as the attachment cutting edge approaches the design elevation. If the attachment is in the controls range it will start automatic movement of the boom and attachment curl as you move the stick lever.

   To temporarily disengage Depth Autos: Let go of the Grade Auto switch. Be aware that while Autos is disengaged you can cut beneath the design. Sometimes you may purposefully want to dig below design, however if this is not the case make sure that you monitor your cut/fills and lightbars. Press and hold the Grade Auto switch again to re-engage Autos.

   You can manually override Depth Autos at any time by moving the boom or attachment.

f. To engage Tilt Autos: Press and hold the Tilt Autos switch as the attachment cutting edge approaches the design elevation. If the attachment is in the controls range it will start automatic movement of the attachment tilt as you move the stick lever.

   To temporarily disengage Tilt Autos: Let go of the Tilt Autos switch. Be aware that while Autos is disengaged you can cut beneath the design. Sometimes you may purposefully want to dig below design, however if this is not the case make sure that you monitor your cut/fills and lightbars. Press and hold the Tilt Autos switch again to re-engage Autos.

   You can manually override Tilt Autos at any time by moving the attachment.

7. If you are using an integrated tiltrotator:
   a. Set the Grade Configuration to Depth and Tilt and toggle on Grade Enable via the Cat Machine Display.
   b. Press the Grade Auto switch and acknowledge the Grade Enable message on the Cat Machine Display.

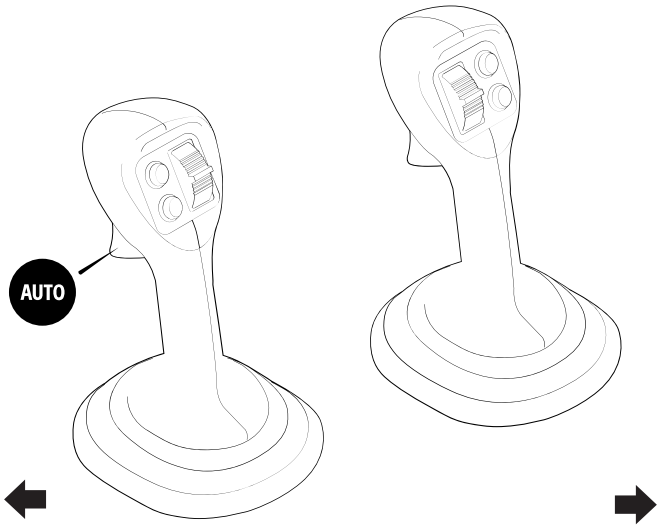

c. To engage Depth and Tilt Autos: Press and hold the Grade Auto switch as the attachment cutting edge approaches the design elevation. If the attachment is in the controls range it will start automatic movement of the boom and attachment as you move the stick lever.

   To temporarily disengage Depth and Tilt Autos: Let go of the Grade Auto switch. Be aware that while Autos is disengaged you can cut beneath the design. Sometimes you may purposefully want to dig below design, however if this is not the case make sure that you monitor your cut/fills and lightbars. Press and hold the Grade Auto switch again to re-engage Autos.

   You can manually override Depth and Tilt Autos at any time by moving the boom or attachment.

Select and Apply a Preset

You can select and apply the active preset via the Autos Setup or Autos Optimization screen. You can access these screens via the Work Settings menu. There is always at least one preset stored which is the Default preset set by your technician in the Web Interface. This cannot be edited or deleted.

Select the active preset that you require and tap Apply.

You can create, edit or delete a preset via the Autos Optimization screen. For more information, see B.12 Depth and Tilt Autos Optimization on Cat NGH mini/micro machines.

B.11.3 Troubleshooting

The table below lists some of the error messages that may appear when you use Autos. You may need to enlist the help of your technician to resolve the error states.

Error Message	Possible cause(s)
Auto State Not Visible	Suspect that other menus or apps are obscuring the Autos icon.
Machine Control System Error	Check the machine display for faults.

Note – When using an integrated tiltrotator, the tilt bucket angle values on this system and the Cat monitor may show a slight difference in values. This is because the data is coming from different sensors.

TIP – When using an integrated tiltrotator, if the bucket tips do not drive to the correct grade try performing a 360 degree revolution of the tiltrotator. This executes an internal calibration that resolves the driving to grade issue.

B.12 Depth and Tilt Autos Optimization on Cat NGH mini/micro machines

Note – If you only want to use Depth Autos, see B.8 Depth Autos Optimization on Cat NGH mini/micro machines. If you only want to use Tilt Autos, see B.10 Tilt Autos Optimization on Cat NGH mini/micro machines. This chapter is for using Depth and Tilt Autos together.

TIP – For information on how to use Autos, see *B.11 Depth and Tilt Autos Setup on Cat NGH mini/micro machines*.

B.12.1 Presets

Presets allow you to save Autos Optimization settings so that you can restore them later. This is useful when there is a change in application or material.

Note – Presets are not dependent on the Auto mode selected. For example, if you create Preset 1 while in Depth and Tilt mode, the same boom and attachment speeds will appear if you select Preset 1 while in Depth mode and the same tilt speed will appear if you select Preset 1 while in Tilt mode.

Select and Apply a Preset

You can select and apply the active preset via the Autos Setup or Autos Optimization screen. You can access these screens via the Work Settings menu. There is always at least one preset stored which is the Default preset set by your technician in the Web Interface. This cannot be edited or deleted.

Select the active preset that you require and tap Apply.

Add a new preset

Note – When you add a new preset the Autos Optimization sliders are set to their default values.

1. In the Autos Optimization screen, tap Create. The Add New Preset screen opens.
2. Tap inside the *Preset Name* field and enter a descriptive name for the preset.
3. Tap Apply. You are returned to the Autos Optimization screen.
4. In the Autos Optimization screen, use the Autos sliders or the arrows to increase (▲) or decrease (▼) the values. For more information, see the section on optimizing the Autos performance.
5. The preset changes to a customized or temporary state (as indicated by the * next to the preset name and the italicized text).
6. Tap Apply to save the preset in its customized state.

   Note – All changes will be discarded if you select the original unmodified preset or a different preset. To save the customized preset permanently, tap Save As. See *Save an edited preset with a new name.*

Edit a preset

Note – If you try to switch to another preset while editing, the Discard All Changes? *confirmation message appears. Any unsaved changes you made will be lost if you tap Yes.*

1. In the Autos Optimization screen, select and apply a preset.
2. Use the Autos sliders or the arrows to increase (▲) or decrease (▼) any of the values.

   Any edit you make to a preset puts it into a customized and temporary state (as indicated by the * next to the preset name and the italicized text) .
3. To save the changes, tap Save As. The Save Preset As screen opens.
4. Turn on the Replace Existing slider. It will auto populate the Preset Name field with the name of the active preset. Tap Apply. You are returned to the Autos Optimization screen. The Preset Overwritten notification message appears.

TIP - To save the customized preset with a new name, see Save an edited preset with a new name.

Save an edited preset with a new name

Any active preset that is in a customized and temporary state (as indicated by the * next to the preset name and the italicized text) can be permanently saved as a new preset with a different name.

1. In the Autos Optimization screen, tap Save As. The Save Preset As screen opens.
2. Tap inside the *Preset Name* field and enter a descriptive name for the preset.

3. Tap Apply. You are returned to the Autos Optimization screen. The Preset Saved Successfully notification message appears.

TIP - If you turn on the Replace Existing slider, it will auto populate the Preset Name field with the name of the active preset. Tap Apply. You are returned to the Autos Optimization screen. The Preset Overwritten notification message appears.

Delete a preset

Note – You cannot delete the Default preset.

1. In the Autos Optimization screen, select a preset and tap the delete icon (🗑) on the right-hand side of the preset.
2. A Delete confirmation message appears.
3. Tap Yes to confirm the deletion.

B.12.2 Optimize the Depth and Tilt Autos performance

Note – Check that your technician has calibrated Autos before you try to adjust the values in the Autos Optimization screen.

You may need to adjust the Autos Optimization settings when, for example, you work with a different type of material (such as sand, dirt, or gravel).

Adjusting the settings in the Autos Optimization screen may improve the performance of Autos. For example, if the boom is overshooting above the target design grade when you pull in the stick, you can decrease the Boom Raise speed.

Autos performance is dependent on the speed that you pull in the stick. Experiment with different speeds to find the optimum for your machine and combination of attachment and material. For example:

- A slower or faster speed may produce a better result.
- A smooth take off speed helps.
- Do not vary the speed while optimizing the sliders.

1. Select High Power mode and turn the throttle up to maximum revs.
2. Using Depth and Tilt Autos, make a test pass in the material you are working, so that you can judge the current performance of Autos.
   a. Place the attachment on grade at near full reach.
   b. Engage Autos.
   c. Watch how quickly or slowly the attachment moves to the on-grade position.

Note – The behavior of Autos when the attachment is not loaded with the same material you will work with does not provide enough information to adjust the values in the Autos Optimization screen. Always use this information in conjunction with the results of a test pass.

3. To make any changes, in the Autos Optimization screen, select the appropriate type from the Optimize drop-down list.
4. Move the slider(s) to increase or decrease the values for the following:

TIP – The apex is where the boom changes from raising to lowering during a pass.

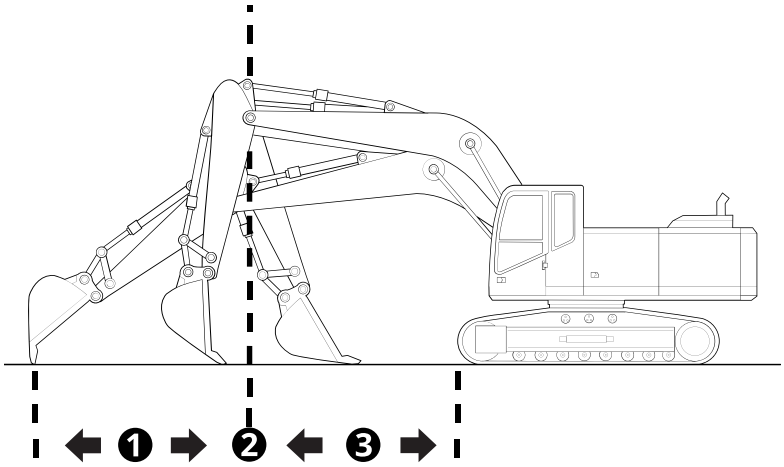

❶ Full reach to apex ❷ Apex ❸ Apex to fully crowded

Type	Option	Description
Attack Angle	Attack Angle	If required, move the Attack Angle slider to change the angle of the bottom of the attachment to the design surface. Zero is parallel, a negative value will lower the back of the attachment and a positive value will raise the back of the attachment.
Rake	Rake In Before Apex	If the finished surface is below grade when you perform a Rake In pass from full reach to the apex, increase this value.

Type	Option	Description
	Rake In After Apex	If the finished surface is below grade when you perform a Rake In pass from apex to fully crowded, increase this value.
	Rake Out Before Apex	If the finished surface is below grade when you perform a Rake Out pass from fully crowded to the apex, increase this value.
	Rake Out After Apex	If the finished surface is below grade when you perform a Rake Out pass from the apex to full reach, increase this value.
Flat Attachment In	Flat Attachment In (Boom) Before Apex	If the finished surface is below grade when you perform a Flat Attachment In pass from full reach to the apex, increase this value. This will control the boom raise and lower commands.
	Flat Attachment In (Boom) After Apex	If the finished surface is below grade when you perform a Flat Attachment In pass from the apex to fully crowded, increase this value. This will control the boom raise and lower commands.
	Flat Attachment In (Attachment) Before Apex	If the attachment changes angle too slowly and does not keep flat on grade when you perform a Flat Attachment In pass from full reach to the apex, increase this value.
	Flat Attachment In (Attachment) After Apex	If the attachment changes angle too slowly and does not keep flat on grade when you perform a Flat Attachment In pass from the apex to fully crowded, increase this value.
Flat Attachment Out	Flat Attachment Out (Boom) Before Apex	If the finished surface is below grade when you perform a Flat Attachment Out pass from fully crowded to the apex, increase this value. This will control the boom raise and lower commands.

Type	Option	Description
	Flat Attachment Out (Boom) After Apex	If the attachment changes angle too slowly and does not keep flat on grade when you perform a Flat Attachment Out pass from the apex to full reach, increase this value. This will control the boom raise and lower commands.
	Flat Attachment Out (Attachment) Before Apex	If the attachment changes angle too slowly and does not keep flat on grade when you perform a Flat Attachment Out pass from fully crowded to the apex, increase this value.
	Flat Attachment Out (Attachment) After Apex	If the attachment changes angle too slowly and does not keep flat on grade when you perform a Flat Attachment Out pass from the apex to full reach, increase this value.
Boom	Raise Speed	Looking at the surface from full reach to the apex, use Boom Raise Speed to make the attachment cut to grade. If the finished surface is consistently below grade, increase this value.
	Raise Response	If the boom is slow to rise, then increase this value.
	Lower Speed	Looking at the surface from the apex to fully crowded, use Boom Lower Speed to make the attachment cut to grade. If the finished surface is consistently above grade, increase this value.
	Lower Response	If the boom is slow to lower, then increase this value.
	Take Off Speed	If the boom is not driving to grade within the first 0.5 m/1.5 ft after the stick is pulled, increase this value. Decreasing this value may reduce oscillations at the very beginning of the pass.

Type	Option	Description
Joystick	Joystick Response Speed	If both the boom and attachment are slow to respond to stick movement, increase this value. Decreasing this value may reduce oscillations at the very beginning of the pass and oscillations observed when the stick movement is slow.
Attachment	Dump Speed	If the attachment is slow to dump for the full duration of the pass, increase this value.
	Dump Response	If the attachment is slow to dump, then increase this value.
	Curl Speed	If the attachment is slow to curl for the full duration of the pass, increase this value.
	Curl Response	If the attachment is slow to curl, then increase this value.
	Tilt Speed	If the attachment is slow to tilt, increase this value.
	Tilt Sensitivity	If the automatic tilt adjustment is erratic or jerky, decrease this value.

5. Tap Apply.
6. Make another test pass and compare the results. Repeat the process, if necessary, until you get the results you desire.

   You may need to enlist the help of your technician for further fine tuning and a precise check of the machine measure-up.

B.13 Best Practices When Using Depth Autos on Cat NGH mini/micro machines

Observe the following best practices to obtain optimal results when using Depth Autos.

Note – Use Autos with a bucket, do not use it with any other type of attachment.

Note – For machines with a two-piece boom, do not move the upper boom while in Autos mode.

WARNING — Do not leave the cab when Depth Autos is engaged. When Depth Autos is engaged, the system will control movement of the boom and attachment. These movements could cause injury to anyone near the attachment, or damage to the machine. Always put the attachment on the ground and engage the hydraulic lockout before you leave the machine.
Do not use Depth Autos if the ground conditions are unstable. Only use Depth Autos to grade a finish surface. Disarm Depth Autos when you perform other applications, such as lifting.

TIP – When using Autos features, avoid connecting the Operator App device to the system via Wi-Fi. Ensure that you use a wired connection.

B.13.1 Prepare the machine

Procedures that your technician or installer should perform before you use Depth Autos:

- Check that the machine is in good operating condition.
- Check that none of the connecting pins (boom, stick, attachment and cylinders) have excessive wear. If the machine is loose, the system cannot produce optimal results.
- Check that the measure-up and calibration of the machine is accurate. The surface you build cannot be better than the accuracy of these measurements and calibrations.
- Check that a valve calibration has been performed.

B.13.2 Best practices for operating excavators

Depth Autos performs best when grading a finish surface.

CAUTION — Avoid installing the remote switch on a Cat NGH mini/micro excavator with the factory standard joysticks. The weight of the module can cause the joystick to tip, which can lead to unintended machine movement.

Procedures to perform every time you use Depth Autos

- Position the machine on solid, stable ground to prevent rocking.

  Rocking will negatively affect the performance of Depth Autos. It is important that both excavator tracks are firmly planted on stable ground. It is not essential that the ground is flat (a sloping surface is okay).

  Note – If you do not have a tilt bucket, the machine will need to sit on a surface that is close to the cross slope on the target surface. The roll of the excavator (slope of the machine measured from one track to the opposite track) will determine the cross slope of the finish surface.

TIP – If the attachment becomes unstable due to machine rocking, stop and wait until the attachment becomes stable before you try again. If the problem persists, prepare the ground that the machine tracks will sit on. Both tracks should sit on stable ground.

- Make sure the machine's hydraulic oil reaches its normal operating temperature (55°C/130°F).
- Select High Power mode and turn the throttle up to maximum revs.

  The hydraulic pump should always have maximum power available to it, so the hydraulic system can respond to automatic commands as quickly as possible.

  Note – It is okay to use the auto idle function on your machine.

TIP – When starting the machine, make sure that it hasn't defaulted to another mode such as Economic or Standard Power mode. Some machines will default to a mode other than High Power when they are started.

- Position the attachment within the control range.

TIP – Use the lightbars, cut/fills and buzzer to guide the attachment.

- If applicable, make sure the following features are disabled before you use Depth Autos:
  - Crane/heavy lift mode
  - Smart boom

Procedures to perform every time you change the attachment

- Check that a precise measure-up has been done for the attachment.
  - If you have an Operator Plus account you can create and edit attachments via the Advanced button on the Edit Attachment screen.
  - If you have an Operator account and it is a new attachment, your technician or dealer must enter the measure-up in the Web Interface before you can select it in the Attachments screen.
- Check the performance of Depth Autos every time you change from one attachment to another, especially if you are going from a large heavy attachment to a smaller one or vice-versa.

  If necessary, adjust the sliders for the boom and/or attachment in the Autos Optimization screen. This can optimize Autos performance.

Procedures to perform, as required

- Update the cutting edge length to account for the wear of the attachment. If required, update the value in the Edit Attachment screen, accessed via the Edit

button on the Attachments screen.

If the cutting edge has worn unevenly, use an average value. However, guidance will never be better than the range of differences in wear.

Note – The frequency at which you need to check the cutting edge length depends on factors such as the type of material you work with and the durability of the cutting edge.

- You can improve the performance of Depth Autos by adjusting the values in the Autos Optimization screen. For example, if the attachment is slow to curl for the full duration of the pass, increase the Attachment Curl Speed.

  Another example of when you might need to adjust the Autos Optimization values is when material conditions change.

Operating practices that can improve performance

- To improve grading performance when material conditions change, adjust the velocity of the stick movement, especially when you first initiate Depth Autos.

  If you use the attachment in a flat position on hard clay, you can initiate the stick lever quickly.

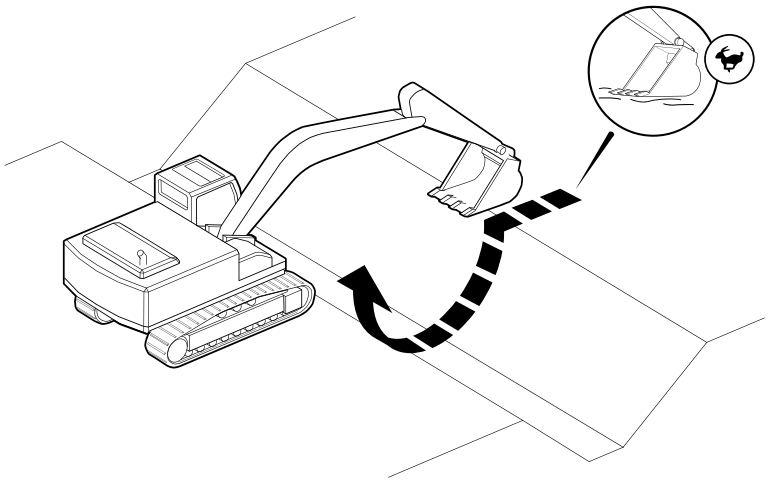

  If you use the attachment in the raking position in loose gravel, initiate the stick lever slowly.

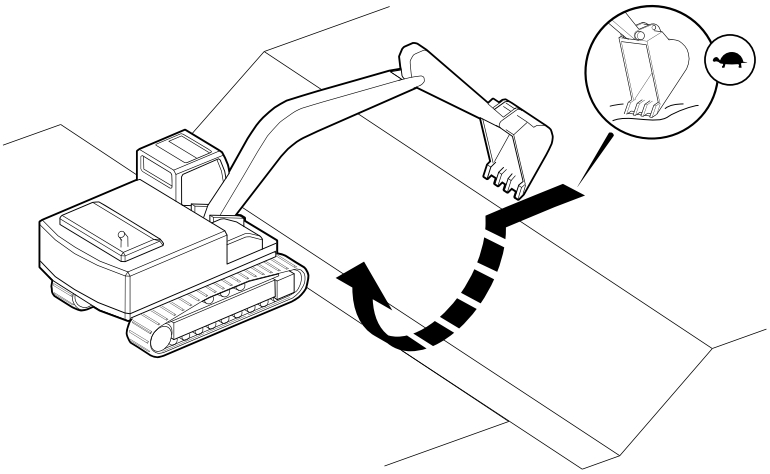

- Decrease the stick velocity when you reach and pass through the apex of the stick (when the boom changes from rising to lowering) or at transitions of slopes.
- If you use the attachment in a flat position when the cutting edge transitions from a sloping to flat design, Depth Autos is often not quick enough to raise the boom and dump the attachment, while also keeping the attachment locked to the design plane. As a result the attachment can unsnap from the design, as shown below.

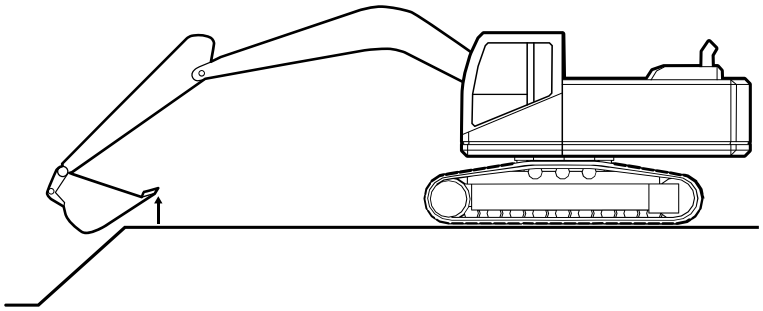

To avoid this, either grade through the transition with the attachment in the raking position or pass through the transition with a flat attachment and then re-position the attachment to grade the flat section, as shown below.

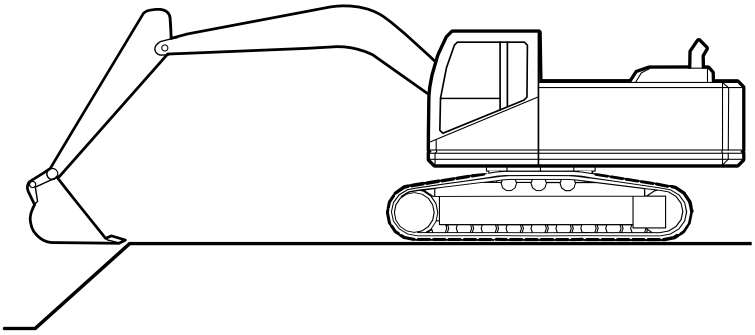

- To achieve the best results, leave the surface a little high before you make the final pass. The attachment is more stable while it is resting on material versus in the air.
- Have the attachment flat against the design surface for the final pass.

  Making a pass in loose material while the attachment is in the rake position will allow material to fall between the teeth. This results in the surface being a little high. For best accuracy, make the final pass with the attachment flat against the design surface.
- To avoid under or over-cutting at the start of a flat attachment pass, allow the attachment to snap to design slope before increasing stick velocity.
- It is best to manually reach design grade with the attachment and then engage Depth Autos while you slowly pull in the stick. The boom transition into Autos is smoother while the stick is in motion versus no motion.

  Avoid engaging Depth Autos while there is no stick motion and the stick is fully extended with the attachment in the rake position. If you do need to start a pass in this position, move the stick slowly to prevent cutting below the target surface.
- When making a pass that will result in full stick cylinder extension, release the depth auto switch just prior to reaching full cylinder extent. This will allow smoother operation and avoid unwanted boom reaction when stalling the stick in Depth Autos.
- The attachment attack angle that will provide optimal grading performance in most applications is to align the cutting edge with the design surface.

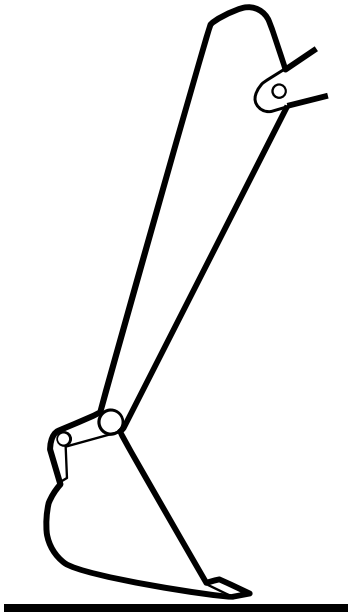

If the attachment attack angle is not aggressive enough, it will ride on the bottom of the attachment and will not allow the cutting edge to reach design. This will result in a system that will continually cut high and not get down to grade.

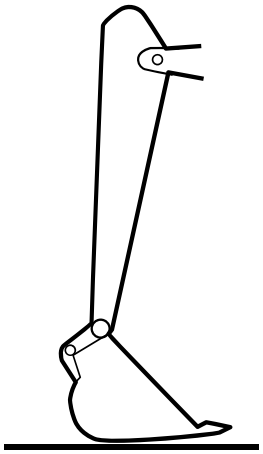

If the attachment attack angle is too aggressive, it will cut into the design when it encounters a load.

TIP – You may need to use this aggressive angle when you work with very hard material.

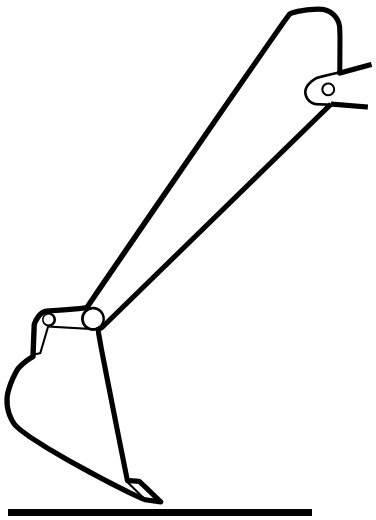

- In the Autos Optimization screen you can also move the Attachment Attack Angle slider to change the angle of the bottom of the attachment to the design surface.

  Zero is parallel, a negative value will lower the back of the attachment and a positive value will raise the back of the attachment

B.14 Best Practices When Using Tilt Autos on Cat NGH mini/micro machines

Observe the following best practices to obtain optimal results when using Tilt Autos.

WARNING — When Tilt Autos is engaged, the system will control movement of the attachment tilt. These movements could cause injury to anyone near the attachment, or damage to the machine. Always put the attachment on the ground and engage the hydraulic lockout before you leave the machine.
Do not use Tilt Autos when somebody is working near the attachment or if the ground conditions are unstable. Only use Tilt Autos to grade a finish surface.
Disarm Tilt Autos when you perform other applications, such as lifting.

TIP – When using Autos features, avoid connecting the Operator App device to the system via Wi-Fi. Ensure that you use a wired connection.

B.14.1 Prepare the machine

Before you use Tilt Autos, your technician or installer should check that:

- The machine is in good operating condition.
- None of the connecting pins (boom, stick, attachment and cylinders) have excessive wear. If the machine is loose, the system cannot produce optimal results.
- The measure-up and calibration of the machine is accurate. The surface you build cannot be better than the accuracy of these measurements and calibrations.
- A valve calibration has been performed.

B.14.2 Best practices for operating excavators

Tilt Autos performs best when grading a finish surface.

If applicable, after the valve is calibrated, avoid changing settings on the tiltrotator controller. This may affect performance and require the valve to be recalibrated.

CAUTION — Avoid installing the remote switch on a Cat NGH mini/micro excavator with the factory standard joysticks. The weight of the module can cause the joystick to tip, which can lead to unintended machine movement.

Procedures to perform every time you use Tilt Autos

- Position the machine on solid, stable ground to prevent rocking.
  Rocking negatively affects the performance of Tilt Autos. It is important that both excavator tracks are firmly planted on stable ground. It is not essential that the ground is flat (a sloping surface is okay).

  TIP – If the attachment becomes unstable due to machine rocking, stop and wait until the attachment becomes stable before you try again. If the problem persists, prepare the ground that the machine tracks will sit on. Both tracks should sit on stable ground.

- Make sure the machine's hydraulic oil reaches its normal operating temperature (55°C/130°F).
- Turn the throttle up to maximum revs.
- Position the attachment within the control range.

  TIP – Use the lightbars, cut/fills and buzzer to guide the attachment.

- If applicable, make sure the following features are disabled before you use Tilt Autos:
  - Crane/heavy lift mode
  - Smart boom

- If you are using a non-integrated tiltrotator, enable the Auto function on the tiltrotator controller before you try to engage Tilt Autos.

Procedures to perform every time you change the attachment

- Check that a precise measure-up has been done for the attachment.
  - If you have an Operator Plus account you can create and edit attachments via the Advanced button on the Edit Attachment screen.
  - If you have an Operator account and it is a new attachment, your technician or dealer must enter the measure-up in the Web Interface before you can select it in the Attachments screen.
- Check the performance of Tilt Autos every time you change from one attachment to another, especially if you are going from a large heavy attachment to a smaller one or vice-versa.

  If necessary, adjust the Tilt Speed slider in the Autos Optimization screen. This may optimize the performance of Tilt Autos.

Procedures to perform, as required

- Update the cutting edge length to account for the wear of the attachment. If required, update the value in the Edit Attachment screen.

  If the cutting edge has worn unevenly, use an average value. However, guidance is never better than the range of differences in wear.

  Note – The frequency at which you need to check the cutting edge length depends on factors such as the type of material you work with and the durability of the cutting edge.
- If necessary, adjust the Tilt Speed slider in the Autos Optimization screen. This may optimize the performance of Tilt Autos.

  An example of when you might need to adjust this value is when material conditions change.

Operating practices that can improve performance

- Minimize slew on steep slopes when you press and hold the Grade Enable switch. A small horizontal change can make a large vertical difference.
- To improve grading performance when material conditions change, adjust the velocity of the boom and/or stick movement, especially when you first initiate Tilt Autos.
- To achieve the best results, leave the surface a little high before you make the final pass. The attachment is more stable while it is resting on material versus in the air.
- To avoid under or over-cutting at the start of a pass, allow the attachment to snap to design slope before increasing stick velocity.
- When approaching changes in design grade, it is best to reduce stick speed and align the bucket tips to the design break-line.

- It is best to avoid straddling changes in design grade by working along/across the design changes and/or adjusting the vertical guidance point location (located in the Work Setting > Attachments menu).
- Slow down the rotation speed if Tilt Autos is not staying on grade during rotation movement, especially when it is in the rake position.

  You can slow rotation speed manually or if it is an on-going problem, try changing the tiltrotator rotation speed. After you have done this, re-tune the tilt speed in the Autos Optimization screen.
- Tilt Autos can be engaged when the bucket is pointing towards the cab (0°) or away from the cab (180°). If you use Tilt Autos only (not in combination with Depth Autos), then Tilt Autos has an operational window of ±70° from either of these working positions.

  Note – This does not apply if you have an engcon tiltrotator with protocol ePS 2.0.
- Tilt Autos performs best when the tilt cylinders are perpendicular to the working surface.
- On some design slopes, it may not be possible for Tilt Autos to reach grade within the tilt cylinder extents. If this occurs, you may need to reposition the bucket and/or machine.

TIP – When using an integrated tiltrotator, if the bucket tips do not drive to the correct grade try performing a 360 degree revolution of the tiltrotator. This executes an internal calibration that resolves the driving to grade issue.

C

Using Tiltrotators on other machine models

In this chapter:

- Using Tiltrotators on Cat NGH mini/micro machines

This section describes the use of Tiltrotators on Cat NGH mini/micro machines.

Note – For other machines, see 7.1 Using Tiltrotators.

C.1 Using Tiltrotators on Cat NGH mini/micro machines

A tilting rotating coupler (tiltrotator) enables you to:

- Rotate the attachment to any angle.
- Tilt the attachment up to 40° from a normal fixed-attachment position, at any rotation angle.

In the display's layout views, the appearance of a tiltrotator attachment is different to that of a standard attachment.

Note – When using an integrated tiltrotator, the tilt bucket angle values on this system and the Cat monitor may show a slight difference in values. This is because the data is coming from different sensors.

TIP – When using Autos features, avoid connecting the Operator App device to the system via Wi-Fi. Ensure that you use a wired connection.

C.1.1 Plan view

For the plan view, the perspective does not change when the attachment rotates.

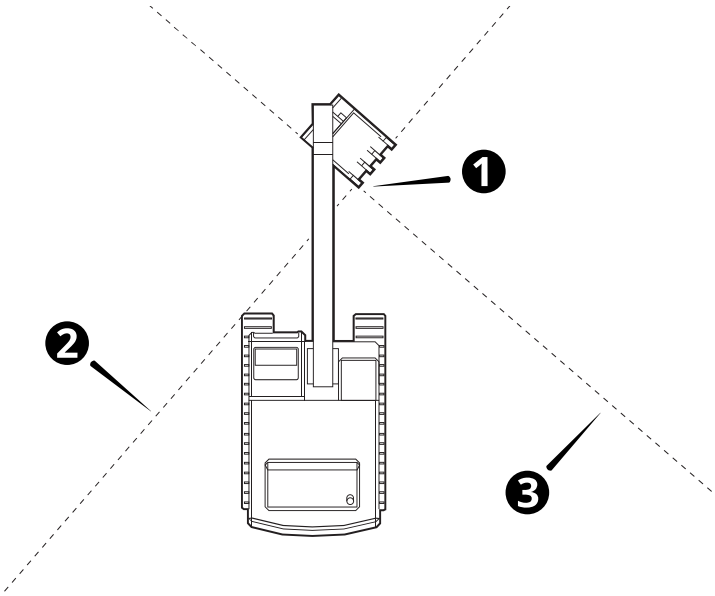

- The attachment (❶) rotates independent of the machine heading.
- The cross section line (❷) rotates with the attachment. It is parallel to the cutting edge.
- The profile line (❸) rotates with the attachment. It is perpendicular to the cutting edge.

C.1.2 Cross section view

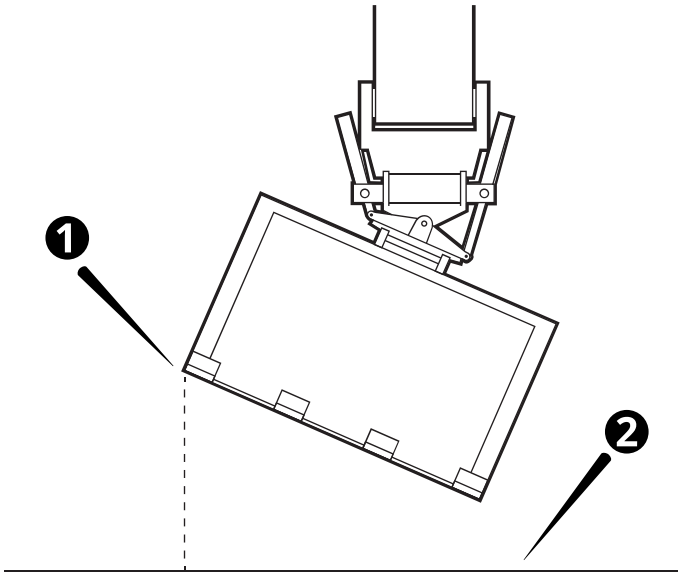

- The cross section view is aligned to the attachment heading (perpendicular to the cutting edge) and rotates with the attachment (❶)
- The cross section line (❷) runs along the design surface underneath the cutting edge and rotates with the attachment (❶).

Note – In the Overlays screen if you turn on visibility of the machine, it will not apply to this view as the machine could block the view of the attachment while it is rotating.

C.1.3 Profile view

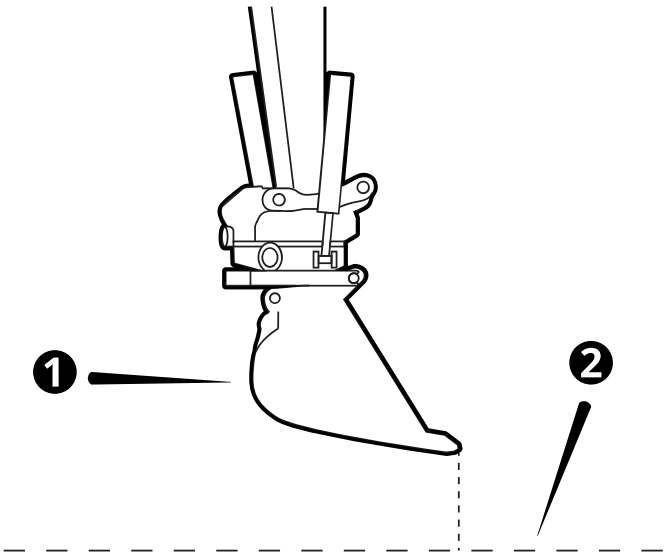

- The profile view is aligned perpendicular to the attachment heading and rotates with the attachment (❶).
- The profile line (❷) runs along the design surface underneath the focus point, in the direction of the attachment heading.

Note – In the Overlays screen if you turn on visibility of the machine, it will not apply to this view as the machine could block the view of the attachment while it is rotating.

C.1.4 3D view

For the 3D view, the perspective does not change when the attachment rotates. The profile and cross section lines rotate with the attachment.

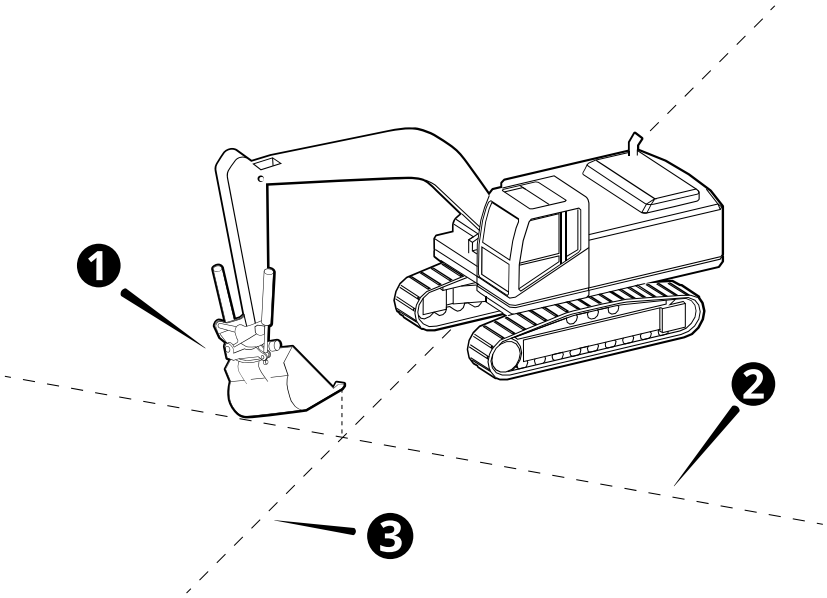

- The attachment (❶) rotates independently of the machine heading.
- The cross section line (❷) runs along the design surface underneath the cutting edge and rotates with the attachment (❶).
- The profile line (❸) runs along the design surface underneath the focus point, in the direction of the attachment heading.

C.1.5 Useful text items

Text items display information on the work screen. When you use a tiltrotator the following text item is available: Attachment Rotation.

D

Legal and Regulatory

In this chapter:

- END USER LICENSE AGREEMENT
- Copyright Information
- Compliance notices
- Safety information

D.1 END USER LICENSE AGREEMENT

IMPORTANT, READ CAREFULLY. THIS END USER LICENSE AGREEMENT ("AGREEMENT") IS A LEGAL AGREEMENT BETWEEN YOU AND TRIMBLE INC. (“Trimble”) and applies to the computer software provided by Trimble with Earthworks (the “Product”) purchased by you (whether built into hardware circuitry as firmware, embedded in flash memory or a PCMCIA card, or stored on magnetic or other media), or provided as a stand-alone computer software product, and includes any accompanying printed materials and any "online" or electronic documentation ("Software"). The Software also includes any software, (including, without limitation, upgrades and updates) relating to the Product that is furnished by Trimble or its dealers (including, without limitation, Trimble software downloaded from Trimble’s or its dealers’ website(s)) unless accompanied by different license terms and conditions that will govern its use. BY CLICKING “YES” OR “I ACCEPT” IN THE ACCEPTANCE BOX, OR BY INSTALLING, COPYING OR OTHERWISE USING THE SOFTWARE, YOU AGREE TO BE BOUND BY THE TERMS OF THIS AGREEMENT. IF YOU ARE ENTERING INTO THIS AGREEMENT ON BEHALF OF A COMPANY OR OTHER LEGAL ENTITY, YOU REPRESENT THAT YOU ARE AUTHORIZED TO BIND THAT COMPANY OR LEGAL ENTITY TO THIS AGREEMENT. IF YOU DO NOT HAVE SUCH AUTHORITY OR ARE UNWILLING OR UNABLE TO BE BOUND BY THIS AGREEMENT, DO NOT CLICK “I ACCEPT” AND DO NOT ACCESS OR USE THE PRODUCT OR SOFTWARE. IF YOU DO NOT AGREE TO THE TERMS OF THIS AGREEMENT, DO NOT USE THE PRODUCT OR THE SOFTWARE. INSTEAD PROMPTLY RETURN THE UNUSED PRODUCT OR SOFTWARE TO THE PLACE FROM WHICH YOU OBTAINED THEM FOR A FULL REFUND. This Software is protected by copyright laws and international copyright treaties, as well as other intellectual property laws and treaties. The software is licensed, not sold.

1 SOFTWARE PRODUCT LICENSE

1.1 – License Grant. Subject to this Agreement, Trimble grants you a limited, non-exclusive, non-sublicensable right to use one (1) copy of the Software in a machine-readable form on the Product. Such use is limited to use with the Product for which it was intended and into which it was embedded. You may use the installation Software from a computer solely to download the Software to one Product. In no event shall the installation Software be used to download the Software onto more than one Product without securing a separate license. A license for the Software may not be shared or used concurrently on different computers or Products.

1.2 - Other Rights and Limitations.

(1) You may not copy, modify, make derivative works of, rent, lease, sell, distribute or transfer the Software, in whole or in part, except as otherwise expressly authorized under this Agreement, and you agree to use all commercially reasonable efforts to prevent its unauthorized use and disclosure.

(2) The Software contains valuable trade secrets proprietary to Trimble and its licensors. To the extent permitted by relevant law, you shall not, nor allow any third party to copy, decompile, disassemble or otherwise reverse engineer the Software, or attempt to do so,

provided, however, that to the extent any applicable mandatory laws (such as, for example, national laws implementing EC Directive 91/250 on the Legal Protection of Computer Programs) give you the right to perform any of the aforementioned activities without Trimble's consent in order to gain certain information about the Software for purposes specified in the respective statutes (i.e., interoperability), you hereby agree that, before exercising any such rights, you shall first request such information from Trimble in writing detailing the purpose for which you need the information. Only if and after Trimble, at its sole discretion, partly or completely denies your request, may you exercise such statutory rights.

(3) This Software is licensed as a single product. You may not separate its component parts for use on more than one Product.

(4) You may not rent, lease, or lend, the Software separate from the Product for which it was intended.

(5) No service bureau work, multiple-user license or time-sharing arrangement is permitted. For purposes of this Agreement "service bureau work" shall be deemed to include, without limitation, use of the Software to process or to generate output data for the benefit of, or for purposes of rendering services to any third party over the Internet or other communications network.

(6) You may permanently transfer all of your rights under this Agreement only as part of a permanent sale or transfer of the Product for which it was intended, provided you retain no copies, you transfer all of the Software (including all component parts, the media and printed materials, any upgrades, and this Agreement) and the recipient agrees to the terms of this Agreement, if the Software portion is an upgrade, any transfer must include all prior versions of the Software.

(7) You acknowledge that the Software and underlying technology may be subject to the export administration regulations of the United States Government relating to the export of technical data and products. This Agreement is subject to, and you agree to comply with, any laws, regulations, orders or other restrictions on the export of the Software from the United States which may be imposed by the United States Government or agencies thereof.

(8) At the request of Trimble, you agree to cooperate with Trimble to track the number of Products using Software at your site(s) to ensure compliance with the license grant and installation restrictions in this Agreement.

(9) Notwithstanding anything to the contrary in this Agreement, any Open Source Software that may be included as a part of the software package shall not constitute a portion of the Software as defined in this Agreement and is not licensed under the terms of this Agreement, but instead is subject to the terms of the applicable Open Source Software license. If required, Trimble has provided the license or notice statement for the applicable Open Source Software and such license or notice statement is accessible through the user interface for the Product. Unless otherwise required pursuant to the terms of an Open Source Software license, Trimble grants you no right to receive source code to the Open

Source Software; however, in some cases rights and access to source code may be available to you directly from the licensors. If you are entitled to receive the source code from Trimble for any Open Source Software included with the software package, you may obtain the source code at no charge by written request to Trimble at 5475 Kellenburger Rd., Dayton, Ohio 45424 USA, Attn: Earthworks Products Manager. You must agree to the terms of the applicable Open Source Software license, or you may not use the subject Open Source Software.

For purposes of this Agreement, "Open Source Software" means those software programs or libraries that are identified in the software documentation, read me and/or about files as being subject to any open source software license, and all modifications, derivative works and executables based on or derived from such software programs or libraries, if such modifications, derivative works and/or executables are also subject to the applicable open source software license by its terms.

(10) Use of both the Product and Software is subject to the terms of user manuals, technical manuals and any other materials provided by Trimble, or their licensors and/or suppliers, in printed, electronic or other form, that describe the installation, operation, use or technical specifications of the Product and/or Software (the "Documentation"). Without limiting the generality of the foregoing, the Documentation shall include the installation manual (a copy of which is viewable at [https://community.trimble.com/community/partners/cec]). The Documentation and the terms in it are hereby incorporated into this Agreement by reference. By installing and/or using the Product or Software, you hereby certify that you have reviewed the Documentation, have received the necessary notice of the terms contained in it, and agree to be bound by it.

1.3 – Termination. You may terminate this Agreement by ceasing all use of the Software. Without prejudice as to any other rights, Trimble may terminate this Agreement without notice if you fail to comply with the terms and conditions of this Agreement. In either event, you must destroy all copies of the Software and all of its component parts, and provide an affidavit to Trimble stating that you have done the same.

1.4 – Copyright. All title and copyrights in and to the Software (including but not limited to any images, photographs, animations, video, audio, music, and text incorporated into the Software), the accompanying printed materials, and any copies of the Software are owned by Trimble and its licensors. You shall not remove, cover or alter any of Trimble's patent, copyright or trademark notices placed upon, embedded in or displayed by the Software or on its packaging and related materials. You may, however, either (1) make one copy of the Software solely for backup or archival purposes, or (2) install the Software on a single computer provided you keep the original solely for backup or archival purposes. You may not copy the accompanying printed materials.

1.5 – U.S. Government Restricted Rights. Use, duplication, or disclosure by the United States Government is subject to restrictions as set forth in this Agreement, and as provided in DFARS 227.7202-l(a) and 227.7202-3(a) (1995), DFARS 252.227-7013(c)(1)(ii) (OCT 1988), FAR 12.212(a) (1995), FAR 52.227-19, or FAR 52.227-14(alt III), as applicable.

2 LIMITED WARRANTY

2.1 - Limited Warranty. Trimble warrants that the Software will perform substantially in accordance with the accompanying written materials for a period of one (1) year from the date of receipt. This limited warranty gives you specific legal rights, you may have others, which vary from state/jurisdiction to state/jurisdiction.

2.2 - Customer Remedies. Trimble 's and its licensors' entire liability, and your sole remedy, with respect to the Software shall be either, at Trimble 's option, (a) repair or replacement of the Software, or (b) return of the license fee paid for any Software that does not meet Trimble 's limited warranty. This limited warranty is void if failure of the Software has resulted from (1) accident, abuse, or misapplication; (2) alteration or modification of the Software without Trimble's prior written authorization; (3) interaction with software or hardware not supplied by Trimble; (4) improper, inadequate or unauthorized installation, maintenance, or storage of the Software or Product; or (5) if you violate the terms of this Agreement. Any replacement Software will be warranted for the remainder of the original warranty period or thirty (30) days, whichever is longer.

2.3 – NO OTHER WARRANTIES. TO THE MAXIMUM EXTENT PERMITTED BY APPLICABLE LAW, TRIMBLE AND ITS LICENSORS DISCLAIM ALL OTHER WARRANTIES AND CONDITIONS, EITHER EXPRESS OR IMPLIED, INCLUDING BUT NOT LIMITED TO, IMPLIED WARRANTIES AND CONDITIONS OF MERCHANTABILITY AND FITNESS FOR A PARTICULAR PURPOSE, TITLE, AND NONINFRINGEMENT WITH REGARD TO THE SOFTWARE AND THE PROVISION OF OR FAILURE TO PROVIDE SUPPORT SERVICES. THE ABOVE LIMITED WARRANTY DOES NOT APPLY TO ERROR CORRECTIONS, UPDATES OR UPGRADES OF THE SOFTWARE AFTER EXPIRATION OF THE LIMITED WARRANTY PERIOD, WHICH ARE PROVIDED "AS IS" AND WITHOUT WARRANTY. BECAUSE THE SOFTWARE IS INHERENTLY COMPLEX AND MAY NOT BE COMPLETELY FREE OF NONCONFORMITIES, DEFECTS OR ERRORS, YOU ARE ADVISED TO VERIFY YOUR WORK. TRIMBLE DOES NOT WARRANT THE RESULTS OBTAINED THROUGH USE OF THE SOFTWARE, OR THAT THE SOFTWARE WILL OPERATE ERROR FREE OR UNINTERRUPTED, WILL MEET YOUR NEEDS OR EXPECTATIONS, OR THAT ALL NONCONFORMITIES CAN OR WILL BE CORRECTED. TO THE EXTENT ALLOWED BY APPLICABLE LAW, IMPLIED WARRANTIES AND CONDITIONS ON THE SOFTWARE ARE LIMITED TO ONE (1) YEAR. YOU MAY HAVE OTHER LEGAL RIGHTS WHICH VARY FROM STATE/JURISDICTION TO STATE/JURISDICTION.

2.4 – LIMITATION OF LIABILITY. TRIMBLE'S ENTIRE LIABILITY UNDER ANY PROVISION OF THIS AGREEMENT SHALL BE LIMITED TO THE GREATER OF THE AMOUNT PAID BY YOU FOR THE SOFTWARE LICENSE OR U.S. $25.00. TO THE MAXIMUM EXTENT PERMITTED BY APPLICABLE LAW, IN NO EVENT SHALL TRIMBLE OR ITS LICENSORS BE LIABLE FOR ANY SPECIAL, INCIDENTAL, INDIRECT OR CONSEQUENTIAL DAMAGES WHATSOEVER (INCLUDING, WITHOUT LIMITATION, DAMAGES FOR LOSS OF BUSINESS PROFITS, BUSINESS INTERRUPTION, LOSS OF BUSINESS INFORMATION, OR ANY OTHER PECUNIARY LOSS) ARISING OUT OF THE USE OR INABILITY TO USE THE SOFTWARE, OR THE PROVISION OF OR FAILURE TO PROVIDE SUPPORT SERVICES, EVEN IF TRIMBLE HAS BEEN ADVISED OF THE POSSIBILITY OF SUCH DAMAGES. BECAUSE SOME STATES AND JURISDICTIONS DO

NOT ALLOW THE EXCLUSION OR LIMITATION OF LIABILITY FOR CONSEQUENTIAL OR INCIDENTAL DAMAGES, THE ABOVE LIMITATION MAY NOT APPLY TO YOU. THE LIMITATIONS SET FORTH IN SECTION 2.4 SHALL APPLY EVEN IF THE LICENSEE'S REMEDIES UNDER THIS AGREEMENT FAIL OF THEIR ESSENTIAL PURPOSE

3 INFORMATION PROVIDED BY YOU FOR 'CONNECTED' FEATURES

The Software is designed to enable certain connected features, such as virtual reference station ("VRS") and Internet base station service ("IBSS") corrections, file sync (for design files, user preferences, Product firmware updates, etc.), 3D productivity services, and connected site services provided by others ("Connected Services"). Please refer to the Software documentation for additional information about Connected Services supported by the Software. You must separately obtain the right to access and use Connected Services, e.g., by maintaining a current subscription for the relevant services. To enable Connected Services, the Software may collect and/or receive data and information (the "Connected Information") relating to your Product and the equipment on which your Product is installed (your "Equipment"), including without limitation:

- Geolocation and 3D position
- Status (including configuration and operation)
- Equipment progress and activity
- VRS and IBSS correction information
- File sync and GNSS data
- Operator Key

The Connected Information may be transferred to your Connected Services providers through the networking and telematics systems installed on your Equipment (whether utilizing cellular, satellite, local area networks, ethernet or other similar systems, the "Telematics System") or manual file transfer (e.g., USB). The actual Connected Information collected and received will vary based on, among other things, the configuration of your Product and Equipment (including your Telematics Systems) and the related Connected Services that you separately elect to access and use. Please carefully review any agreements and documentation relating to such Connected Services to understand how the Connected Service provider may store and use the Connected Information.

In addition, Trimble or its affiliated companies may collect, store and receive data and information ("User Information") relating to your use of the Software, Product and Equipment, including without limitation:

- Device/Company Identity Data includes machine ID, machine sensor configuration, and software configuration
- Location includes Global Navigation Satellite System and beacon-based location
- Analytics Data includes Software versions, display model, stack trace system configuration, current design, features in use, time in each screen, button pushes, and Software bug and crash reports.

The actual User Information collected and received will vary based on, among other things, the configuration of your Product and Equipment and the related product(s) that you separately elect to access and use. You acknowledge and agree that Trimble or its affiliated companies may, directly or indirectly through the services of third parties, use User Information for its internal business purposes, including but not limited to: (i) making the Software and Products available and providing services to you; (ii) improving the performance of the Software and Products, researching and developing updates and other products and services, and analyzing adoption and usage of the Software and Products; and (iii) verifying your compliance with the terms of this Agreement and enforcing Trimble's rights, including all intellectual property rights in and to the Software and the Product(s). In order to provide you with the full range of benefits made possible by the Product(s) and our services, and in connection with the uses described above, Trimble may share the User Information with its affiliated companies. The affiliated companies may use the User Information for their own internal purposes in a manner consistent with the uses described above. Trimble and its affiliated companies may also disclose User Information if we have a good faith belief that (1) the disclosure is necessary or useful to our provision of services; (2) the disclosure is necessary to protect our rights, interests, or property; (3) the disclosure is necessary or useful to protect your safety or the safety of others, to investigate fraud, or to respond to a government request; (4) the disclosure is required by law, such as to comply with a subpoena, search warrant, court order, or similar legal or administrative process; or (5) Trimble or its affiliated company is or will be purchased or otherwise acquired, in which User Information will likely be among the assets transferred. Trimble and its affiliated companies and third parties acting on Trimble's or its affiliate's behalf may analyze User Information to analyze and create performance metrics, collect and evaluate other information relating to the Software and Product(s), and track anonymized and technical information to improve the Software and Product(s) ("Machine Performance Data"). Any information Trimble or its affiliated companies track in this manner is anonymous and limited to usage and volume statistics. Trimble and its affiliated companies may make the Machine Performance Data commercially available to third parties to the extent that it is aggregated or otherwise de-identified so that it cannot be used to identify you. By accepting this Agreement, you acknowledge and agree to the collection and use of the Connected Information, User Information and Machine Performance Data as provided above.

The Software may also automatically provide Software bug and crash reports via your Equipment's Telematics Systems to Trimble or its vendors for purposes of maintaining, supporting, or improving the Software.

You may incur additional charges for the transfer of Connected Information, User Information and Machine Performance Data, or Software bug and crash reports by your telecommunications service providers or your Connected Services providers, as applicable.

4 GENERAL

4.1 – This Agreement shall be governed by the laws of the State of California and applicable United States Federal law without reference to "conflict of laws" principles or provisions. The United Nations Convention on Contracts for the International Sale of Goods will not

apply to this Agreement. Jurisdiction and venue of any dispute or court action arising from or related to this Agreement or the Software shall lie exclusively in or be transferred to the courts located in Santa Clara County, California, and/or the United States District Courts for California. You hereby consent and agree not to contest, such jurisdiction, venue and governing law.

4.2 - Notwithstanding Section 4.1, if you acquired the Product in Canada, this Agreement is governed by the laws of the Province of Ontario, Canada. In such case each of the parties to this Agreement irrevocably attorns to the jurisdiction of the courts of the Province of Ontario and further agrees to commence any litigation that may arise under this Agreement in the courts located in the Judicial District of York, Province of Ontario.

4.3 - Official Language. The official language of this Agreement and of any documents relating thereto is English. For purposes of interpretation, or in the event of a conflict between English and versions of this Agreement or related documents in any other language, the English language version shall be controlling.

4.4 - Trimble reserves all rights not expressly granted by this Agreement.

© 2021, Trimble Inc. All Rights Reserved.

D.2 Copyright Information

Copyright© 2017, Trimble Inc. All rights reserved.

Trimble and the Globe & Triangle logo are trademarks of Trimble Inc., registered in the United States and in other countries.

CMR and CMR+ are trademarks of Trimble Inc.

Android is a trademark of Google Inc.

Wi-Fi, WPA and WPA2 are trademarks of the Wi-Fi Alliance, registered in the United States and other countries. Developed under a License of the European Union and the European Space Agency.

The Bluetooth word mark and logos are owned by the Bluetooth SIG, Inc. and any use of such marks by Trimble Inc. is under license.

D.3 Release Notice

#copyright_version_footer#

D.4 Compliance notices

D.4.1 US FCC regulations

The following statement applies to these devices:

- EC520 electronic control module (FCC ID: K7T-WIFIHU2S and FCC ID: TLZ-NM230NF)
- TD520 display (FCC ID: TLZ-NM230NF)
- GS520 grade sensor
- AA510 audible alarm
- CI510 CAN interface

Note: This equipment has been tested and found to comply with the limits for a Class B digital device, pursuant to part 15 of the FCC Rules. These limits are designed to provide reasonable protection against harmful interference in a residential installation. This equipment generates, uses and can radiate radio frequency energy and, if not installed and used in accordance with the instructions, may cause harmful interference to radio communications. However, there is no guarantee that interference will not occur in a particular installation. If this equipment does cause harmful interference to radio or television reception, which can be determined by turning the equipment off and on, the user is encouraged to try to correct the interference by one or more of the following measures:

- Reorient or relocate the receiving antenna.
- Increase the separation between the equipment and receiver.
- Connect the equipment into an outlet on a circuit different from that to which the receiver is connected.
- Consult the dealer or an experienced radio/TV technician for help.

D.4.2 Canadian license-exempt RSS standards

The following statement applies to these devices:

- EC520 electronic control module (IC: 2377A- WIFIHU2S and IC: 6100A- NM230NF)
- TD520 display (IC: 6100A- NM230NF)
- GS520 grade sensor
- AA510 audible alarm
- CI510 CAN interface

CAN ICES-3 (B)/NMB-3(B)

This device complies with Industry Canada license-exempt RSS standard(s). Operation is subject to the following two conditions:

1. This device may not cause interference, and;
2. This device must accept any interference, including interference that may cause undesired operation of the device.

Cet appareil est conforme avec Industrie Canada RSS standard exempts de licence (s). Son fonctionnement est soumis aux deux conditions suivantes:

1. Cet appareil ne peut pas provoquer d'interférences; et
2. Cet appareil doit accepter toute interférence, y compris les interférences pouvant entraîner un mauvais fonctionnement de la appareil.

D.4.3 European Union CE compliance

The following statement applies to these devices:

- EC520 electronic control module
- TD520 display
- GS520 grade sensor
- AA510 audible alarm
- CI510 CAN interface
- VM510 valve module

These devices are compliant with the following Directives and standards

- Machinery 2006/42/EC
- RoHS 2015/863/EU
- ISO 13766:2006
- ISO 13309:2010

The EC520 electronic control module and the TD520 display are also compliant with the following additional Directives and standards:

- Radio Equipment Directive 24/53/EU
- IETSI EN 300-328 V2.1.1
- ETSI EN 301-489-1 V2.1.0
- ETSI EN 301-489-17 V3.1.1

D.4.4 European Union recycling compliance

These products comply with the WEEE Directive 2012/19/EU. For recycling in Europe call:

+31 479 53 24 30

To request instructions by writing:

Trimble Europe BV

C/O Menlo Worldwide Logistics

Meerheide 45

5521 CZ Eersel, NL

D.4.5 Australian and New Zealand AS/NZS 55022 compliance

AS/NZS 55022 compliance applies to these devices:

- EC520 electronic control module
- TD520 display
- GS520 grade sensor
- AA510 audible alarm
- CI510 CAN interface

D.4.6 Japan Radio Type Approval

Construction Design Certificates apply to these devices:

- EC520 electronic control module (208-160089, R - 201-16379 and T- D 160 253 201)
- TD520 display (R - 201-16379 and T- D 160 253 201)

D.4.7 RoHS Statement

This device conforms to RoHS (Reduction Of Hazardous Sub-stances) European Union regulations that set maximum concentration limits on hazardous materials used in electrical and electronic equipment.

CAUTION: RISK OF EXPLOSION IF BATTERY IS DISPOSED OF INCORRECTLY. DISPOSE OF THE DEVICE AND THE BATTERY ACCORDING TO INSTRUCTIONS FOR ELECTRONIC WASTE.

D.4.8 Taiwan

低功率電波輻射性電機管理辦法
第十二條：經型式認證合格之低功率射頻電機，非經許可，公司、商號或使用者均不得擅自變更頻率、加大功率或變更原設計之特性及功能。
第十四條：低功率射頻電機之使用不得影響飛航安全及干擾合法通信；經發現有干擾現象時，應立即停用，並改善至無干擾時方得繼續使用。低功率射頻電機需忍受合法通信或工業、科學及醫療用電波輻射性電機設備之干擾。
SAR 標準值2.0W/Kg，送測產品實測值為0.545w/Kg

D.5 Safety information

Most accidents that involve product operation, maintenance and repair are caused by failure to observe basic safety rules or precautions. An accident can often be avoided by recognizing potentially hazardous situations before an accident occurs. A person must be alert to potential hazards. This person should also have the necessary training, skills and tools to perform these functions properly.

Improper operation, lubrication, maintenance or repair of this product can be dangerous and could result in injury or death.

Do not operate or perform any lubrication, maintenance or repair on this product, until you have read and understood the operation, lubrication, maintenance and repair information.

Safety precautions and warnings are provided in this manual and on the product. If these hazard warnings are not heeded, bodily injury or death could occur to you or to other persons.

The hazards are identified by the “Safety Alert Symbol” and followed by a “Signal Word” such as “DANGER”, “WARNING” or “CAUTION”. The Safety Alert “WARNING” label is shown below.

WARNING — This alert warns of a potential hazard which, if not avoided, can cause severe injury.

The meaning of this safety alert symbol is as follows:

Attention! Become Alert! Your Safety is Involved.

The message that appears under the warning explains the hazard and can be either written or pictorially presented.

Operations that may cause product damage are identified by “NOTICE” labels on the product and in this publication.

Trimble cannot anticipate every possible circumstance that might involve a potential hazard. The warnings in this publication and on the product are, therefore, not all inclusive. If a tool, procedure, work method or operating technique that is not specifically recommended by Trimble is used, you must satisfy yourself that it is safe for you and for others. You should also ensure that the product will not be damaged or be made unsafe by the operation, lubrication, maintenance or repair procedures that you choose.

The information, specifications, and illustrations in this publication are on the basis of information that was available at the time that the publication was written. The specifications, torques, pressures, measurements, adjustments, illustrations, and other items can change at any time. These changes can affect the service that is given to the product. Obtain the complete and most current information before you start any job. Dealers have the most current information available.

D.5.1 Laser Safety

As with any bright light source, such as the sun, electric welding arcs or arc lamps, common sense applies:

- DO NOT look into the laser aperture when the laser is on.
- Viewing laser output with telescopic optical instruments (for example, telescopes and binoculars) may pose an eye hazard.
- Do not remove any warning signs from the laser.
- Use of a laser transmitter by personnel that are not trained on the product may result in exposure to hazardous laser light.

For further information regarding safe use of lasers, refer to the IEC 60825-1 2007, or the manufacturer's documentation supplied with your laser transmitter.

D.5.2 Magnet Safety

The neodymium magnets supplied with the magnetic display mount are very strong. Handling them with care is necessary to prevent personal injuries, and property damage:

- Pacemakers may be damaged or switch to "Test Mode" in the presence of a strong magnetic force. If a pacemaker is in use, keep a minimum of 30 cm (1 foot) distance.
- Be extremely careful when handling the magnets near other magnets or ferrous metal. Losing control of a magnet may result in damage to intervening objects, such as a finger or a cab window.
- Do not remove any warning signs from the magnets.
- The strong magnetic fields of the magnets can damage electronic devices such as hearing aids, items that rely on magnetic storage media such as credit cards, bank cards, and computers, and items containing ferromagnetic components such as mechanical watches.

D.5.3 Crushing prevention and cutting prevention

Support the equipment properly when you work beneath the equipment. Do not depend on the hydraulic cylinders to hold up the equipment. An attachment can fall if a control is moved, or if a hydraulic line breaks.

Unless you are instructed otherwise, never attempt adjustments while the machine is moving. Also, never attempt adjustments while the engine is running.

Whenever there are attachment control linkages, the clearance in the linkage area will increase or the clearance in the linkage area will decrease with movement of the attachment. Stay clear of all rotating and moving parts.

Keep objects away from moving fan blades. The fan blade will throw objects or cut objects.

Do not use a kinked wire cable or a frayed wire cable. Wear gloves when you handle wire cable.

When you strike a retainer pin with force, the retainer pin can fly out. The loose retainer pin can injure personnel. Make sure that the area is clear of people when you strike a retainer pin. In order to avoid injury to your eyes, wear protective glasses when you strike a retainer pin.

Chips or other debris can fly off objects when you strike the objects. Make sure that no one can be injured by flying debris before striking any object.

D.5.4 Operation

Clear all personnel from the machine and from the area.

Clear all obstacles from the machine's path. Beware of hazards (wires, ditches, etc).

Be sure that all windows are clean.

Secure the doors and the windows in the open position or in the shut position.

Adjust the rear mirrors (if equipped) for the best visibility close to the machine.

Make sure that the horn, the travel alarm (if equipped), and all other warning devices are working properly.

Fasten the seat belt securely.

Warm up the engine and the hydraulic oil before operating the machine.

Only operate the machine while you are in a seat.

The seat belt must be fastened while you operate the machine. Only operate the controls while the engine is running.

While you operate the machine slowly in an open area, check for proper operation of all controls and all protective devices. Before you move the machine, you must make sure that no one will be endangered.

Do not allow riders on the machine unless the machine has the following equipment:

- Additional seat
- Additional seat belt
- Rollover Protective Structure (ROPS)

Note any needed repairs during machine operation. Report any needed repairs.

Avoid any conditions that can lead to tipping the machine. The machine can tip when you work on hills, on banks and on slopes. Also, the machine can tip when you cross ditches, ridges or other unexpected obstructions.

Avoid operating the machine across the slope. When possible, operate the machine up the slopes and down the slopes.

Maintain control of the machine.

Do not overload the machine beyond the machine capacity.

Be sure that the hitches and the towing devices are adequate.

Never straddle a wire cable. Never allow other personnel to straddle a wire cable.

Before you maneuver the machine, make sure that no personnel are between the machine and the trailing equipment.

Always keep the Rollover Protective Structure (ROPS) installed during machine operation.

Monitor the location of mounted components. Ensure that the components do not come into contact with other parts of the machine during operation.

D.5.5 Exposure to radio frequency (RF) signals

This system uses devices that contain radio transmitters and receivers. The radiated output power is far below the international radio frequency exposure limits. These limits are part of comprehensive guidelines and establish permitted levels of RF energy for the general population. The guidelines are based on the safety standards previously set by international standards bodies:

- American National Standards Institute (ANSI) IEEE. C95.1-1992.
- National Council on Radiation Protection and Measurement (NCRP). Report 86. 1986.
- Int'l Commission on Non-Ionizing Radiation Protection (ICNIRP) 1996.
- Ministry of Health (Canada), Safety Code 6. The standards include a substantial safety margin designed to assure the safety of all persons, regardless of age and health.

Use of unauthorized or modified antennas may impair signal quality and damage a device, causing loss of performance. To assure optimal performance, and ensure human exposure to RF energy is within the guidelines set forth in the relevant standards, always use a device in its normal-use position.

Maintain a minimum 20 cm distance from radio transmitters when they are in use. Avoiding contact with the antenna area when a device is IN USE optimizes the antenna performance.

Exposure to radio frequency radiation from Bluetooth and WLAN transmitters

Devices are approved as a portable devices with respect to Radio Frequency (RF) exposure compliance. The radiated output power of the internal wireless radio transmitters is less than 100 milliwatt, which results in exposure levels far below the FCC radio frequency exposure limits, even when operated in close proximity to the body. The internal wireless radios operate within guidelines found in international radio frequency safety standards and recommendations, which reflect the consensus of the international scientific community. Trimble therefore believes the internal wireless radios are safe for use by users. The level of electromagnetic energy emitted is hundreds of times lower than the electromagnetic energy emitted by wireless devices such as mobile phones. However, the use of wireless radios may be restricted in some situations or environments, such as on aircraft. If you are unsure of restrictions, you are encouraged to ask for authorization before turning on the wireless radios.

Exposure to radio frequency radiation from cellular wireless transmitters

Devices equipped with wireless cellular modem radios have been designed and manufactured to meet safety requirements for limiting exposure to radio waves. When used in accordance with the instructions set forth in this manual, the equipment has been

independently verified to not exceed the emission limits for safe exposure to radio frequency (RF) energy as specified by the Federal Communications Commission of the U.S. Government in 47 CFR §2.1093. These limits are part of comprehensive guidelines and establish permitted levels of RF energy for the general population. The guidelines are based on standards that were developed by independent scientific organization through periodic and thorough evaluation of scientific studies. The standards include a substantial safety margin designed to assure the safety of all persons, regardless of age and health.

D.5.6 Telecommunications & Internet Association (TIA) information

Hearing Aids: Some digital wireless phones may interfere with some hearing aids. In the event of such interference, you may want to consult your wireless service provider, or call customer service to discuss alternatives.

Pacemakers and Other Medical Devices: The Health Industry Manufacturers Association recommends a minimum separation of six inches be maintained between a handheld wireless phone and a pacemaker to avoid potential interference with the pacemaker. These recommendations are consistent with the independent research by and recommendations of Wireless Technology Research. Persons with pacemakers should use the ear opposite the pacemaker to minimize the potential for interference. Persons with pacemakers should exercise great caution if using a hands-free device such as a headset, as these persons may be at greater risk of the device not maintaining the recommended minimum six inches of separation from the pacemaker. If you have any reason to suspect that interference is taking place, turn the device OFF immediately.

If you use any other personal medical device, consult the manufacturer of your device to determine if they are adequately shielded from external RF energy. Your physician may be able to assist you in obtaining this information.

Turn the device OFF in health care facilities when any regulations posted in these areas instruct you to do so. Hospitals or health care facilities may be using equipment that could be sensitive to external RF energy.

D.5.7 Warnings

WARNING — When replacement parts are required for this product Trimble recommends using Trimble replacement parts or parts with equivalent specifications including, but not limited to, physical dimensions, type, strength and material. Failure to heed this warning can lead to premature failures, product damage, personal injury or death.

WARNING — Disconnect the negative battery terminal before commencing any welding. Ensure that power is removed from the system by disconnecting the power input cable(s). Failure to follow this warning may result in electric shock.

WARNING – Do not weld on or drill into any part of the machine's Roll Over Protection Structure (ROPS) as this could weaken its structural integrity.

WARNING — When transporting machines with removable sensors such as GNSS receivers or UTS targets installed, if the sensor mounting bracket clamp loosens, then the sensor may be dislodged from the machine which may result in injury or death. Always remove and store removable sensors prior to transport.

WARNING — When removing or installing removable sensors such as GNSS receivers or UTS targets, if the sensor is accessed improperly, then a fall may result in injury or death. Always follow site, state or national Health and Safety guidelines when removing or installing removable sensors.

WARNING — The magnets on the magnetic display mount are strong. If parts of your hands get between two magnets when you move them, the magnets may suddenly move and pinch or clamp the skin. When the magnets are close together, position your hands so they are not between the two magnets.

WARNING — If you have a pacemaker and handle the magnetic display mount, the magnet can affect the function of the pacemaker and cause physical harm. Remain at least 30 cm (1 foot) from the magnetic display mount if you have a pacemaker.

WARNING — Before disconnecting electrical components, disconnect the battery cable and attach a Do Not Operate tag in the operator's compartment to inform personnel that the equipment is being worked on. Accidental engine starting can cause injury or death to personnel working on the equipment. To avoid accidental engine starting, place and lock a lock-out box onto the battery terminal.

WARNING — The front linkage may move abruptly and in unexpected directions when you check the connections between the joystick, valve module, and the valve block. This sudden movement could cause injury to anyone near the front linkage. To avoid injury, make sure that there is adequate clearance from people and objects and be prepared to lock the hydraulic functions.

WARNING — If the attachment has a quick coupler and the coupler is not connected correctly, the attachment may come off. This could cause injury to anyone near the attachment. To avoid injury, make sure that the coupler is fully engaged and the mechanism linking the stick and attachment is firmly secured before moving.

WARNING — When working with a raised attachment, if you allow parts of your body to extend under the attachment or the front linkage, then unexpected movement of the attachment or front linkage may result in injury or death. Always maintain adequate clearance from the potential path of the attachment or front linkage.

WARNING — Do not leave the cab when Depth Autos is engaged. When Depth Autos is engaged, the system will control movement of the boom and attachment. These movements could cause injury to anyone near the attachment, or damage to the machine. Always put the attachment on the ground and engage the hydraulic lockout before you leave the machine.
Do not use Depth Autos if the ground conditions are unstable. Only use Depth Autos to grade a finish surface. Disarm Depth Autos when you perform other applications, such as lifting.

WARNING — When Tilt Autos is engaged, the system will control movement of the attachment tilt. These movements could cause injury to anyone near the attachment, or damage to the machine. Always put the attachment on the ground and engage the hydraulic lockout before you leave the machine.
Do not use Tilt Autos when somebody is working near the attachment or if the ground conditions are unstable. Only use Tilt Autos to grade a finish surface. Disarm Tilt Autos when you perform other applications, such as lifting.

WARNING — When Depth and Tilt Autos is engaged, the system will control movement of the boom and attachment. These movements could cause injury to anyone near the attachment, or damage to the machine. Always put the attachment on the ground and engage the hydraulic lockout before you leave the machine.
Do not use Depth and Tilt Autos when somebody is working near the attachment or if the ground conditions are unstable. Only use Depth and Tilt Autos to grade a finish surface. Disarm Depth and Tilt Autos when you perform other applications, such as lifting.

WARNING — Do not stare into the laser beam when the laser transmitter is operating. For more information, refer to the documentation that came with your laser.

WARNING – The TD520 display screen is designed to minimize glare in a wide variety of environments. However, when using the display in direct sunlight, there is still the possibility of sun-strike on the screen leading to loss of visibility.

WARNING — Entering an avoidance zone could cause personal injury or damage to the machine. Always be aware of nearby avoidance zones when operating a machine.

WARNING — You are responsible for observing safe operating practices. This product does not guarantee error-free avoidance zone guidance.

WARNING — When an attachment is fully curled in, the stick may extend into an avoidance zone before the breach is reported on screen and audibly.

WARNING — If the machine enters an avoidance zone during camera calibration, the operator does not receive a warning. Avoid calibrating the AR camera when the machine is near an avoidance zone.

Notices

© 2017 Trimble Incorporated. All rights reserved.

See https://heavyindustry.trimble.com/earthworksreleases for the latest:

- Terms and conditions.
- Important safety information.
- Warranty and compliance information.

To provide feedback on this document, email feedback_documentation@trimble.com.